RECEIVED-PUBLIC
UTILITIES COMMISSION
OF NEVADA-CARSON CITY
2011 JUN 16 AM 9:22

BEFORE THE PUBLIC UTILITIES COMMISSION OF NEVADA

In the Matter of the Application of TGP Dixie Development Company, LLC, for a permit to construct the Coyote Canyon Geothermal Electric Generating project pursuant to the Nevada Utility Environmental Protection Act.	)	DOCKET NO. _____

APPLICATION OF TGP DIXIE DEVELOPMENT COMPANY, LLC
FOR A PERMIT TO CONSTRUCT
THE COYOTE CANYON GEOTHERMAL ELECTRIC GENERATION PROJECT

COMES NOW, TGP Dixie Development Company, LLC, ("TGP") by and through its attorneys, ALLISON, MacKENZIE, PAVLAKIS, WRIGHT, & FAGAN, LTD., and submits herewith its application to the Nevada Public Utilities Commission ("Commission") for a permit to construct utility facilities to be known as the TGP Coyote Canyon Geothermal Project (referred to as the "Coyote Canyon Project" "CC" and the "Project"). The Coyote Canyon Project will be located in Dixie Valley, Churchill County, Nevada. The utility facilities will include a 70 MW geothermal power plant and associated production/injection wells, pipelines, and support facilities. The Project will also include a 0.4 mile long 230 kV transmission line which will connect to an existing 211 mile 230 kV transmission line which extends from Terra-Gen Power, LLC's existing Dixie Valley geothermal power plant to the Control Substation located near Bishop, California. The project area is comprised of federal leases issued to the Coyote Canyon Project by the U.S. Department of Interior, Bureau of Land Management ("BLM").

This application is filed pursuant to the Utility Environmental Protection Act ("UEPA"), NRS 704.820 et seq. and NAC 703.421 and NAC 703.423.

A. BACKGROUND AND AUTHORIZED REPRESENTATIVES

1. TGP is a Delaware limited liability company authorized to conduct business in the state of Nevada.

2. TGP is a wholly owned subsidiary of Terra-Gen Power Company ("Terra-Gen"). Terra-Gen owns and operates geothermal, wind and solar electric generating facilities in the western states. Terra-Gen currently owns and operates the 60 MW Dixie Valley geothermal electric generating station in Churchill County, Nevada.

3. TGP's principal place of business mailing address and telephone number are: 11512 El Camino Real, Suite 100, San Diego, CA 92130. (858) 764-3736.

4. All corresondence related to this application should be sent to the following:

Vincent J. Signorotti
Vice President, Land Management
Terra-Gen Power, LLC
11512 El Camio Real, Suite 100
San Diego, CA 92130

and

Patrick V. Fagan, Esq.
Allison, MacKenzie, Pavlakis,
Wright & Fagan, Ltd.
P. O. Box 646
Carson City, NV 89702

B. INFORMATION REQUIRED BY NAC 703.423 AND NRS 704.870

TGP in support of its application, submits the following:[1]

1. A description of the location of the proposed utility facility as required by subsection 1 of NRS 704.870 including:

[1] All references to sections in the application conform to NAC 703.423(1)-(12)

(a) A general description of the location of the proposed utility facility, including a regional map that identifies the location of the proposed utility facility.

TGP proposes to construct and operate a nominal 70 MW, utility grade geothermal power plant in Dixie Valley, Churchill County, Nevada. To allow for flexibility, four potential locations for the project have been selected for proposed power plant facilities. Only one of the four locations would be constructed. A map which identifies the location of the proposed utility facility is attached hereto as Exhibit "1." The project includes a 0.4 mile, 230 kilovolt (kV) transmission line ("Gen-Tie" line). The Gen-Tie line will interconnect with the existing 211 mile, 230 kV transmission line which runs between Terra-Gen's Dixie Valley electric generating facility in Churchill County, NV and the Control Substation located in California near Bishop, CA.

The proposed project will utilize five BLM leases. The Coyote Canyon project is entirely on federal leases managed by the BLM Carson City Stillwater Field Office.

(b) A legal description of the site of the proposed utility facility with the exception of electric lines, gas transmission lines, and water and wastewater lines, for which only a detailed description of the site is required.

The proposed electrical generating facility will be located within the boundaries of the Coyote Canyon Exploration Unit, which was approved by the Bureau of Land Management effective May 1, 2011 (Serial No. NVN-89020X). The Coyote Canyon Unit encompasses approximately 15,313.14 acres of land of which all but 87.63 acres consists of land leased to TGP Coyote Canyon, LLC (and certain TGP affiliates) from the Department of the Interior, Bureau of Land Management. The legal description of the four proposed plant sites is as follows:

Site 1: A parcel approximately 40 acres in size located within the Northwest Quarter of Section 13, Township 24 North, Range 36 East, M.D.B.&M. on Federal Geothermal Resources Lease N-61707.

Site 2: A parcel approximately 40 acres in size located within the Southwest Quarter of Section 14 and the Southeast Quarter of Section 15, Township 24 North, Range 36 East, M.D.B.&M. on Federal Geothermal Resources Lease N-17282.

Site 3: A parcel approximately 40 acres in size located within the East Half of the Northwest Quarter and the West Half of the Northeast Quarter of Section 22, Township 24 North, Range 36 East, M.D.B.&M. on Federal Geothermal Resources Lease N-17283A.

Site 4: A parcel approximately 40 acres in size located within the South Half of the Northeast Quarter and the North Half of the Southeast Quarter of Section 21, Township 24 North, Range 36 East, M.D.B.&M. on Federal Geothermal Resources Lease N-86892.

(c) Appropriately scaled site plan drawings of the proposed utility facility, vicinity maps and routing maps.

Appropriately scaled site plans drawings of the proposed utility facility, vicinity maps and routing maps, specifically Figure 2-1, TGP Coyote Canyon Proposed Action Map and General

Plan Arrangement, are attached hereto as Exhibit "2" and incorporated herein by this reference.

2. A description of the proposed utility facility, including:

(a) The size and nature of the proposed utility facility.

The proposed facility will consist of a 70 Mw flash electric generating unit. The geothermal fluid to be utilized in production will include approximately 5.9 million pounds of fluid per hour (19,050 acre feet per year (afy)). The geothermal fluid will be received from production wells located at the site and will enter the plant and move through a series of high and low pressure separators where steam is separated from the geothermal fluid. The spent geothermal fluid is injected back into the geothermal resource. The steam is sent to a steam turbine generator where the thermal energy in the steam is converted into mechanical energy by rotating the steam turbine roter, which turns a generator to produce electrical energy. The steam is then condensed back to a liquid state for reuse in the process and ultimately injected back into the geothermal resource.

The cooling process used to condense the steam would be either a dry cooling system or a hybrid cooling system. The hybrid cooling system is being evaluated for possible use when ambient air temperatures are too high to efficiently condense steam. The hybrid cooling system uses a combination of water cooling and dry cooling technologies to accomplish the cooling process required. This hybrid cooling technology results in a significant reduction in water consumption over a traditional wet cooling system. The process water would be obtained by drilling and permitting a non-potable source of water with the Nevada Division of Water Resources ("NDWR").

The power plant facility would connect to TGP's existing 230 kV line via a 0.4 mile long 230 kV Gen-Tie. The proposed Gen-Tie routes are shown on Figure 2-1 attached hereto as Exhibit "2." Only one route will be selected based on the final location of the power plant. The Gen-

Tie would consist of a single 230 kV circuit on H-frame or 3-pole wooden structures that would be approximately 85 feet tall. Examples of the H-frame and 3-pole structures are shown in Exhibit "3" attached hereto. Construction of each Gen-Tie pole would require a temporary disturbance of 0.5 acre and an approximately 30 x 40 foot area for installing the electrical conductors or line. Installation of each wooden pole would require a permanent disturbance of approximately 6-8 square feet per pole.

The power plant would include an electrical substation that would convert the electric power generated to a voltage of 230 kV. A main control building would contain instrumentation and telecommunications equipment. The substation would measure up to 250 x 175 feet and would be surrounded by an 8-foot-tall chain link fence with a vehicle and personnel access gates.

(b) The natural resources that will be used during the construction and operation of the proposed utility facility.

The project has received a decision record and finding of no significant impact (FONSI) from BLM both dated March 7, 2011. Both the decision record and FONSI approve the proposed construction of the Coyote Canyon Project. The FONSI states that the project will not have a significant effect on the human environment nor the natural resources located in the project area. Natural resources that will be used during the construction and operation of the proposed facility include geothermal fluid (brine), water, and resources contained in building materials and machinery required for the construction of the project. The decision record and FONSI are attached hereto as Exhibit "8".

(c) Layout diagrams of the proposed utility facility and its associated equipment.

See Attached Exhibit "2."

(d) Scaled diagrams of the structures at the proposed utility facility.

See Attached Exhibit "2."

(e) A statement concerning whether the proposed utility facility is an electric generating plant or the associated facilities of an electric generating plant that uses renewable energy as its primary source of energy to generate electricity.

The Coyote Canyon Project will be an electric generating plant that uses geothermal brine which is defined as a renewable energy resource pursuant to NRS 704.7811.

3. A copy and summary of any studies which have been made of the environmental impact of the proposed utility facility as required by subsection 1 of NRS 704.870.

Environmental studies conducted for the Coyote Canyon Project include:

(a) Environmental Assessment, TGP Dixie Development Company, LLC Coyote Canyon and Dixie Meadows Geothermal Exploration dated April, 2010. (Exhibit "7").

(b) Environmental Assessment, TGP Dixie Development Company, LLC Coyote Canyon Geothermal Utilization dated November, 2010. (Exhibit "8").

The proposed action area is 55 miles northeast of Fallon, Churchill County, NV at elevations ranging from approximately 3,400 to 3,600 feet in the northern part of Dixie Valley. The proposed project will be located on the eastern slope of the Stillwater range in an area dominated by mild salt desert scrub vegetation. Terrains within the project area are gently slopping alluvial fans and valley bottom. The environmental assessment prepared by the BLM evaluated the impacts on the natural and human environment that could result from construction of the Coyote Canyon Project. The impact analysis in the environmental assessment characterizes the potential for impacts for each resource identified in the environmental assessment in the project area. Resources

examined included, but were not limited to, air quality, cultural resources, invasive, non-native and noxious species, migratory birds, wildlife, water and paleontological resources. The conclusion of the BLM as set forth in its FONSI was that the proposed project will not have a significant effect on the human and natural environment of the proposed project.

4. **A description of any reasonable alternate locations for the proposed utility facility, a description of the comparative merits or detriments of each location submitted, and a statement of the reasons why the location is best suited for the proposed utility facility, as required by subsection 1 of NRS 704.870.**

The environmental assessment has approved the construction of the project within the resource area defined by five BLM leases described in Exhibit "4." As referenced in the environmental assessment, before starting to prepare the electric generating facility site, TGP must obtain from BLM a BLM geothermal site license agreement and construction permit. Also, an approved commercial use permit must be obtained prior to commencing commercial operations from the facility. No alternatives to the current sites defined by the five BLM leases have been considered.

The Dixie Valley area is located on an alluvial plane near the foot of the Stillwater Range in Churchill County, Nevada. The project area lies with the Great Basin which is characterized by low lying alluvial filled valleys, beach gravels, dune deposits and north or northeast trending fault-bounded mountain ranges. The plant sites for the proposed Coyote Canyon electrical generating facility were selected based on a variety of criteria. One of the major considerations in selecting a power plant location was to avoid the valley playa, which extends in a southeasterly orientation from the foot of the Stillwater Range, in order to take advantage of the natural stability that is found on land that is located nearer to the range front. Each of the four proposed plant sites being considered represents the minimum adverse effect on the environment within the area expected to contain geothermal fluids in commercial quantities. The selected sites were designed to avoid

environmentally sensitive areas including wetlands, wildlife habitat, areas of cultural significance and native vegetation.

The development of geothermal energy facilities is unlike a fossil fuel plant because the facility must be located near the location where the geothermal fluids are produced. In most instances and depending on the temperature and pressure of the resource once it reaches the surface, there is a limitation on the distance geothermal fluids can travel in insulated above-ground pipelines while still retaining its heat value as the fuel for a power plant. Accordingly, as a means of conserving the resource and to maximize efficiency, geothermal power plants are typically located within a distance of not more than one mile from the well head of the production wells supplying the fuel for the plant.

5. **A copy of the public notice of the application or amended application and proof of the publication of the public notice, as required by subsection 4 of NRS 704.870.**

See Exhibit "5."

6. **Proof that a copy of the application or amended application has been submitted to the Nevada State Clearinghouse within the Department of Administration to enable agency review and comment.**

See Exhibit "6."

7. **An explanation of the nature of the probable effect on the environment, including:**

(a) A reference to any studies described in subsection 3, if applicable.

See, the Environmental Assessment for Geothermal Exploration dated April, 2010 and the Environmental Assessment for Geothermal Utilization dated November, 2010 attached hereto as Exhibits "7" and "8," respectively.

(b) An environmental statement that includes:

(1) The name, qualifications, professions and contact information of each person with primary responsibility for the preparation of the environmental statement.

See, Section 5 of the Exhibit "8" Environmental Assessment dated November, 2010.

(2) The name, qualifications, professions and contact information of each person who has provided comments or input in the preparation of the environmental statement.

See, Section 5 of the Exhibit "8" Environmental Assessment dated November, 2010.

(3) A bibliography of materials used in the preparation of the environmental statement.

See, Section 6 of the Exhibit "8" Environmental Assessment dated November, 2010.

(4) A description of:

(i) The environmental characteristics of the project area existing at the time the application or amended application is filed with the Commission.

Air Quality

The CC project area is located in a rural area with minimal industrial sources or potential contribution to emissions to the airshed from vehicle traffic. Activities associated with the Proposed Actions would occur in Groundwater Basin 128 in Churchill County, Nevada Groundwater basins in the state of Nevada correspond to airsheds and, therefore, Groundwater Basin 128 is the analysis area for air quality. This basin is in attainment for all National Ambient Air Quality Standards (NAAQS) and Nevada air quality standards. In addition, the area is not a maintenance area for any criteria pollutants.

Regulatory Environment

The U.S. Environmental Protection Agency (EPA) Office of Air Quality Planning and

Standards and NDEP have set NAAQS and Nevada ambient air quality standards for the following criteria pollutants: nitrogen dioxide, sulfur dioxide, carbon monoxide, and particulate matter smaller than 10 microns in aerodynamic diameter (PM10), particulate matter smaller than 2.5 microns in aerodynamic diameter (PM2.5), ozone, and lead. In addition to the above-listed criteria pollutants, NDEP has established an ambient air quality standard of 0.08 parts per million (ppm) or 112 micrograms per cubic meter for hydrogen sulfide (H2S). Nevada Administrative Code 445B.22097 provides the minimum standards of quality for Nevada ambient air.

Attainment is achieved when the existing background concentrations for criteria air pollutants are less than the maximum allowable ambient concentrations defined in the NAAQS. The attainment status, with respect to the NAAQS, of the air shed in which the Proposed Actions are located precludes the requirement for an air quality conformity analysis.

The Final Mandatory Reporting of Greenhouse Gases Rule issued by the EPA, as signed on September 22, 2009, requires suppliers of fossil fuels or industrial greenhouse gases (GHG), manufacturers of vehicles and engines, and facilities that emit 25,000 metric tons or more per year of GHG emissions to submit annual reports to the EPA. The Nevada Division of Environmental Protection (NDEP) also requires GHG emissions reporting. However, NDEP has exempted geothermal projects from GHG reporting.

Cultural Resources

Cultural resources include historic and prehistoric sites of interest and may include structures, archaeological sites, or religious sites of importance to Native American cultures. Section 106 of the National Historic Preservation Act as amended (16 USC 40 et seq.) requires federal agencies to take into account the effects of their actions on properties listed or eligible for listing on

the National Register of Historic Places (NRHP). The National Park Service (NPS) defines archaeological and historic resources as "the physical evidences of past human activity, including evidences of the effects of that activity on the environment. What makes a cultural resource significant is its identity, age, location, and context in conjunction with its capacity to reveal information through the investigatory research designs, methods, and techniques used by archeologists." Ethnographic resources are defined as any "site, structure, object, landscape, or natural resource feature assigned traditional legendary, religious, subsistence, or other significance in the cultural system of a group traditionally associated with it" (NPS, 1998).

The basic cultural chronology of the western Great Basin includes the Pre-Archaic and Archaic Periods (Elston, 1986). A more thorough background of the prehistoric, historic, and ethnographic resources found in the area can be found in the inventory report conducted for this project (Young and Garner 2009). Below is a very brief summary of this 12,000 years of human occupation in western Nevada.

The Pre-Archaic period is defined by artifacts including Clovis and Folsom fluted lanceolate projectile points and Lake Mojave lanceolate projectile points. Reliance on big game hunting dominated the Pre-Archaic subsistence strategy. The main indicator of the shift to the Archaic period is a change to a broader strategy focused on hunting and gathering of resources. The projectile points became smaller and more suited for hunting smaller game, although they were still mounted on the ends of a dart or spear, and there was an increase in the number and type of stone grinding implements used for plant and seed processing.

The material culture diversified greatly with the contemporaneous introduction of pottery and the bow and arrow with smaller projectile points. By around A.D. 1200, an expansion

of Numic-speaking peoples into the area seems to have replaced or displaced the previous inhabitants (Bettinger and Baumhoff, 1982). Archaeologically, the primary material culture of the Numic includes Intermountain Brownware pottery and Desert Side Notched and Cottonwood Triangular arrow points. The subsistence strategy appears to have shifted back to a focus on hunting and gathering, although there is some evidence of at least limited reliance on horticulture. The Numic-speaking peoples, including the Northern Paiute, were the occupants of the Great Basin upon the initial arrival of Europeans and their influences. Cultural resource investigations of the project area were conducted in July 2009 (Young and Garner, 2009). The investigations included Class I literature reviews of both State of Nevada and BLM field office files and Class III pedestrian inventories of the CC project area.

The Class I literature search reviewed files at both the BLM Carson City Field Office and the Nevada State Museum Annex in Carson City (Garner and Young, 2009), which included the project area and a one-mile buffer. The files indicate numerous small projects have been conducted in the past, mainly in support of geothermal exploration in Dixie Valley. Forty-seven previously recorded sites have been identified within the project area and a one-mile buffer. Most of these sites are small, simple lithic and ground stone scatters. Most of the prehistoric sites are generally located on the gentle alluvial fan on the west side of Dixie Valley. Historic resources previously documented include historic roads, homesteads, and a borax mine. All previously recorded sites within the project area were revisited during the cultural resource surveys conducted for this project (see below)

Coyote Canyon

The entire CC project area was surveyed for cultural resources, either by Far Western during the 2009 surveys for this project or by other recent investigations in the area for small

geothermal exploration or testing projects (McGuire, 1993). Fifteen cultural resource sites have been identified in the project area, two of which were combined into one site based on the recommendations of the cultural resources study, resulting in a total of 14 cultural resource sites. Prehistoric sites dominate the assemblage; one historic site was identified during a previous investigation (McGuire 1993). The historic site consists of a small-scale mining venture with associated artifacts and was previously recommended as not eligible. The site was reexamined and updated during the current inventory and is recommended as not eligible to the NRHP.

Of the remaining 13 sites, nine are classified as a simple flaked stone assemblage, two as a complex flaked stone assemblage, one as a simple ground stone assemblage, and one as a complex ground stone assemblage. Six prehistoric sites (three previously identified and three identified during the current inventory) have been determined to be eligible for listing to the NRHP based upon the potential to yield data that would contribute to the understanding of the prehistoric occupation of the area. Seven prehistoric sites are not recommended eligible for listing on the NRHP. At this stage, all recommendations for site eligibility for listing on the NRHP are based on preliminary field recommendations and are subject to review and possible changes during BLM and State Historic Preservation Office (SHPO) consultations.

Native American Religious Concerns

Consultation was initiated with the Fallon Paiute-Shoshone Tribe on July 6, 2009. Correspondence included a description of the proposed project, cultural resource inventory and a map. Subsequent correspondence provided the results of the cultural resource inventory and subsequent final report (October 27 and November 30, 2009). A face to face meeting was conducted between the BLM and tribal staff on January 12, 2010. Consultation will be ongoing.

Water Quality, Wetlands, and Floodplains

Groundwater

The CC lease area is located in the internally drained Dixie Valley groundwater basin (NDWR-designated Administration Groundwater Basin 128). Dixie Valley is located in Nevada Hydrographic Region 10 (Central Region) (NDCNR-DWR, 2005), and is in the Great Basin hydrographic area. By Order 715, dated June 8, 1978, the Nevada State Engineer has "designated" the Dixie Valley groundwater basin, which indicates that the permitted groundwater rights approach or exceed the estimated average annual recharge and the water resources are being depleted or require additional administration (NDCNR-DWR, 2009).

Groundwater Basin 128 has an area of 1,303 square miles and a perennial yield of 15,000 acre-feet per year (AFY). The basin has committed underground water rights of 18,076 AFY and geothermal water rights of 13,428 AFY (NDCNR-DWR, 2009). Groundwater occurs in alluvial basin fill sediments and in underlying bedrock. In the northern portion of Dixie Valley, where the project areas are located, groundwater moves south through the valley, east from the Stillwater Mountains, and west from the Clan Alpine Mountains.

Recharge to groundwater occurs from precipitation, primarily snowmelt, at higher elevations in the Stillwater Range and Clan Alpine Range west and east of Dixie Valley and in the alluvial fans and landslide deposits at the base of these mountains. The Humboldt Salt Marsh (playa) is the ultimate groundwater sink for Dixie Valley and six sub basins that are adjacent to Dixie Valley (Fairview, Pleasant, Jersey, Eastgate, Cowkick, and Stingaree valleys). Groundwater moves radially from the surrounding mountains and converges on the playa, where it discharges. Vertically, groundwater moves upward in the central part of the valley in response to hydraulic gradients, where

it discharges to the playa and is lost to evaporation and transpiration.

Groundwater occurs in two separate but related aquifers in Dixie Valley: a shallow, non-thermal, alluvial aquifer and a deep, thermal, bedrock aquifer (Karst, 1987). Groundwater in the alluvium occurs under unconfined and confined conditions; however, hydraulic heads are typically beneath the elevation of the valley floor. Thermal groundwater is confined and generally occurs in fractured, zones within the bedrock underlying the alluvial basin fill sediments. Deep thermal groundwater and shallower alluvial groundwater are separated by a confining sequence thousands of feet thick, composed of shale, siltstone, volcaniclastic rocks, and a complex of intrusive and extrusive igneous rocks that includes gabbro, diorite, and basalt (Bruton et al., 1997). Chloride isotope analysis and a geochemical mixing evaluation reported by Bruton et al. (1997) indicates that shallow groundwater in Dixie Valley contains approximately 15 percent geothermal water, likely from fumaroles and hot springs in the area. As a groundwater discharge area, the depth to groundwater is anticipated to be shallow throughout much of northern Dixie Valley and would be expected to be shallowest close to the Humboldt Salt Marsh.

The total dissolved solids (TDS) concentration in shallow alluvial groundwater in Dixie Valley ranges from 900 to 1,900 milligrams per liter (mg/L) according to data tabulated by Karst (1987). Thermal groundwater in the area generally has higher dissolved solids content; however, the maximum TDS value reported by Karst was 1,920 mg/L, essentially the same as the maximum non-thermal groundwater concentration of 1,900 mg/L (Karst, 1987).

Surface Water

Based on analysis of USGS topographic maps and NDWR groundwater basin mapping, the Proposed Actions would be located in an internally drained desert basin that is a great

distance from and lacks hydrographic connectivity to major rivers and water bodies. Therefore, there are no navigable waters of the United States within Rivers and Harbors Act jurisdiction (as defined by 33 CFR part 329) and no waters of the United States within Clean Water Act jurisdiction (as defined by 33 CFR 328) in the CC project area. A letter asking for an approved jurisdictional determination concurring with this finding was sent to the U.S. Army Corps of Engineers on July 13, 2009. A response is pending.

Coyote Canyon

The geothermal reservoir to be explored in CC is at an expected depth of up to 10,000 feet. The USGS 7.5-minute topographic map of the area (Bolivia, Nevada Quadrangle 1990) shows ephemeral washes flowing southeast across the alluvial fan and valley bottom within the CC lease area and into the Humboldt Salt Marsh within Dixie Valley. These ephemeral washes only flow from significant rainfall or snowmelt events and those observed during field visits were dry. There are no Federal Emergency Management Agency (FEMA) Flood Insurance Program Mapping (FIRM) special flood hazard areas (SFHAs) or floodway areas within the CC project area (FEMA, 2008a). USGS mapping shows three seeps in Section 23 and one seep in Section 24. There is a spring on the southern border of the lease area, on the border of Sections 22 and 27. There are numerous seeps and springs mapped directly south of the lease area. There are no National Wetland Inventory (NWI) mapped wetlands within the CC lease area (USFWS, 2008); however, palustrine emergent wetlands associated with seeps in Sections 23 and 24 were observed during field visits.

Biological Resources

Biological surveys, including a habitat assessment and general wildlife explorations, of the CC lease area, was conducted on June 29, 30, and July 1, 2009 (CH2M HILL, 2009b). An

additional assessment of vegetation in portions of the project areas was conducted August 24 to 27, 2009. Southwest Regional Gap Analysis Project (SWReGAP) landcover data were supplemented and updated with field explorations and reference to Intermountain Flora, Volume 1 (U.S. Geological Survey [USGS], 2004; Cronquist et al., 1972).

Vegetation

The vegetation within this semi-arid area is controlled greatly by elevation, substrate, aspect, and landform. Alluvial fan surfaces above 3,430 feet above sea level and below the mountain front support the intermountain basins mixed salt desert scrub community, with the exception of dry wash channels, which contain intermountain basins greasewood flats. The area between 3,430 feet above sea level and the edge of the intermountain basin playa community (generally 3,390 to 3,400 feet above sea level) is composed of a mosaic of halophytic (salt-tolerant) and hydrophytic (wetland) plant communities. The halophytic communities include intermountain basins greasewood flats, saltgrass (Distichlis spicata var. stricta) meadows, and iodinebush (Allenrolfea occidentalis) scrub. The hydrophytic communities are primarily marshes typified by cattail (Typha latifolia), rush (Juncus spp. and Scirpus spp.), and common reed (Phragmites australis) among other species. The playa is largely barren of vegetation.

The intermountain basins mixed salt desert scrub community is characterized by open shrubland dominated by shadscale (Atriplex confertifolia) with scattered bush seepweed (Suaeda moquinii), yellow rabbitbrush (Chrysothamnus viscidiflorus), Nevada jointfir (Ephedra nevadensis), spiny hopsage (Grayia spinosa), budsage (Artemisia spinescens), broom snakeweed (Gutierrezia sarothrae), winterfat (Krascheninnikovia lanata), Indian ricegrass (Achnatherum hymenoides), and cheatgrass (Bromus tectorum). Despite its apparent diversity there is much barren ground between

the shrubs, and there is little grass cover. Cheesebush (Hymenoclea salsola) and desert trumpet (Eriogonum inflatum var. deflatum) were found occupying disturbed areas.

The intermountain basins greasewood flats community is dominated by greasewood (Sarcobatus vermiculatus) and contains sparsely scattered Torrey's saltbush (Atriplex torreyi), yellow rabbitbrush, saltlover (Halogeton glomeratus), budsage, and bush seepweed. Bare ground is common and the substrate usually possesses the poorly developed soils of washbottoms. Again there are few perennial grasses.

At the fringe of the playa, where the salt concentration appears too great for greasewood, more salt-tolerant communities such as saltgrass meadow and iodinebush scrub are found. Marshes are found at springs, seeps, and around open water in the CC project area. These palustrine emergent wetlands are surrounded by desert vegetation or playa. The marsh vegetation is adapted to saturated soil conditions and includes species of rush, knotweed (Polygonum spp.), canarygrass (Phalaris spp.), spikerush (Eleocharis spp.), duckweed (Lemna sp.), as well as common reed and cattail. Riparian trees and shrubs are not common and are restricted to isolated stands of willow (Salix sp.), wild rose (Rosa woodsii), Russian olive (Eleaegnus angustifolia), and saltcedar (Tamarix ramosissima), the latter two being introduced species, invasive in many hydric habitats.

Coyote Canyon

Just fewer than half the potential well pads in the CC project area and their associated access routes are located in intermountain basins mixed salt desert scrub community. Most of the remainder of the potential well pads and their access routes are located in salt-tolerant communities (e.g., intermountain basins greasewood flats, saltgrass meadow, and iodinebush scrub). A minority of the potential well pads are located within the intermountain basin playa community, some of

which may be in the vicinity of marsh vegetation associated with seeps and springs, based on analysis of aerial photographs.

Invasive, Non-native, and Noxious Species

The State of Nevada lists 47 noxious weed species that require control (Nevada Administrative Code 555.10; Nevada Department of Agriculture, 2008). Of these, saltcedar (Tamarix ramosissima) was the only noxious weed identified in the project areas during field surveys. In addition, the following invasive, non-native species were identified within or in the vicinity of the project areas: Russian olive (Elaeagnus angustifolia), cheat grass (Bromus tectorum), Russian thistle (Salsola kali), and common sowthistle (Sonchus oleraceus).

Migratory Birds

On January 11, 2001, President Clinton signed Executive Order 13186 (Land Bird Strategic Project) placing emphasis on conservation and management of migratory birds. The species are not protected under the Endangered Species Act, but most are protected under the Migratory Bird Treaty Act of 1918. Management for these species is based on Instruction Memorandum - IM 2008-050 dated December 18, 2007 (BLM, 2007b). Migratory birds with potential to use the project areas, such as black-throated sparrow (Amphispiza bilineata), horned lark (Eremophila alpestris), and common raven (Corvus corax), are species associated with intermountain basins mixed salt desert scrub, salt-tolerant communities, marsh, and playa habitats.

Coyote Canyon

Table 12 of Exhibit "7" lists migratory birds potentially present in CC.

Special-status Species

Threatened and Endangered Species

BLM Manual 6840 - Special Status Species Management, establishes policy for management of species listed or proposed for listing pursuant to the Endangered Species Act that are found on BLM-administered lands (BLM, 2008c).

Pursuant to the requirements of Section 7(c) of the Endangered Species Act, for federal agencies to consult with the U.S. Fish and Wildlife Service (USFWS) concerning listed species, separate letters were sent to USFWS on July 15, 2009, requesting information regarding threatened and endangered species that may occur in the CC project area. USFWS responded in separate letters dated August 26, 2009, that to the best of its knowledge no listed, proposed, or candidate threatened and endangered species exist in the CC project area.

BLM Sensitive Species

BLM Manual 6840 - Special Status Species Management, establishes policy for management of BLM sensitive species that are found on BLM-administered lands (BLM, 2008c). Species designated as BLM sensitive must be native species found on BLM-administered lands for which the BLM has the capability to significantly affect the conservation status of the species through management, and either:

1. There is information that a species has recently undergone, is undergoing, or is predicted to undergo a downward trend such that the viability of the species or a distinct population segment of the species is at risk across all or a significant portion of the species range, or

2. The species depends on ecological refugia or specialized or unique habitats on BLM-administered lands, and there is evidence that such areas are threatened with alteration such that the continued viability of the species in that area would be at risk. BLM mapping confirmed

(USGS, 2008) and field surveys verified that no greater sage grouse (Centrocercus urophasianus) habitat is present within the lease boundary. However, sage grouse may use water sources in desert scrub habitat that is relatively near sagebrush habitat (Wilson, 2009).

Table 14 of Exhibit "7" presents BLM sensitive species, their habitat association, and presence/absence of habitat in the project areas.

Wildlife Resources

Wildlife found in the project areas is typical of Great Basin deserts. Wildlife species observed in the area during biological surveys included various bird species, coyote (Canis latrans), black-tailed jackrabbit (Lepus californicus), cottontail (Sylvilagus spp.), white-tailed antelope squirrel (Ammospermophilus leucurus), horned lizard (Phyrnosoma platyrhinos), zebra-tailed lizard (Callisaurus draconoides), western whiptail (Aspidoscelis tigris), side-blotched lizard (Uta stansburiana), and long-nosed leopard lizard (Gambelia wislizenii). Bat habitat is found in mines, caves, and rock crevices of the Stillwater Range.

Marsh and open water habitats are found in and around the CC project area. Herons, egrets, bitterns, ducks, geese, and other birds associated with open water and wetland habitats occur in these areas. The marsh areas also provide habitat for amphibian species.

Invasive, Non-native, and Noxious Species

The State of Nevada lists 47 noxious weed species that require control (Nevada Administrative Code 555.10; Nevada Department of Agriculture, 2008). Of these, saltcedar (Tamarix ramosissima) was the only noxious weed identified in the project areas during field surveys. In addition, the following invasive, non-native species were identified within or in the vicinity of the project areas: Russian olive (Elaeagnus angustifolia), cheat grass (Bromus tectorum), Russian thistle

(Salsola kali), and common sowthistle (Sonchus oleraceus).

Wastes, Hazardous or Solid

There are no known hazardous wastes or hazardous materials known to occur in the project area. Numerous federal and state laws and regulations have been enacted including the Resource Conservation and Recovery Act (RCRA) and Nevada Revised Statute 459.400 and are enforced by the Nevada Division of Environmental Protection (NDEP) Bureau of Waste Management to ensure that hazardous materials, hazardous waste and solid wastes are properly handled, stored, and disposed of.

Visual Resources

BLM utilizes a visual resource management (VRM) process to manage the quality of landscapes on public land and to evaluate the potential impacts to visual resources resulting from development activities. VRM class designations are determined by assessing the scenic value of the landscape, viewer sensitivity to the scenery, and the distance of the viewer to the subject landscape. These management classes identify various permissible levels of landscape alteration, while protecting the overall visual quality of the region. They are divided into four levels (Classes I, II, III, and IV). Class I is the most restrictive and Class IV is the least restrictive in terms of changes that are allowed to the characteristic landscape (BLM, 1986).

Based on information contained in the Consolidated Resource Management Plan (BLM, 2001) and environmental assessments for other projects sharing this vicinity, the CC lease area is located within a Class IV VRM category. The objective for this class is to provide for management activities that allow major modifications of the existing character of the landscape. The level of change to the characteristic landscape can be high. Activities in a Class IV category may

dominate the view and be the major focus of viewer attention. However, every attempt should be made to minimize the impact of these activities through careful location, minimal disturbance, and repeating the basic elements.

The closest transportation route is Dixie Valley Road, which is designated State Route 121. The closest urban sensitive receptor (park, church, residence, school, or hospital) is located in Lovelock, Nevada, approximately 27 air miles west of the project sites. The Stillwater Mountain Range, with peaks higher than 8,500 feet, is located between the CC lease area and Lovelock. The closest receptor would be the 7 Devils Ranch located approximately 14 miles northeast of CC.

Paleontological Resources

An Initial Paleontological Resources Assessment for the CC project area was completed in August 2009 (CH2M HILL, 2009a). In it, the initial Potential Fossil Yield Classifications (PFYC) of the geological units affected by the Proposed Actions were determined following the guidance of BLM's Instructional Memorandum no 2008-009 (BLM, 2007c). Initial PFYC classifications were based on the results of literature searches and record reviews, as well as an analysis of remote imagery of the project area. In the case of the CC project area, there are sediments designated as possessing low paleontological sensitivity (PFYC = 2), and those possessing unknown sensitivity but which have yielded scientifically important fossils in other parts of the Great Basin (PFYC = 3b). These latter are sediments that were similar in character and geomorphic setting to those laid down on the margins of Pleistocene (Ice Age) lakes and at ancient springs, both of which are found in the CC project area. Satellite imagery was used to estimate the extent of these sediments, and then these findings were field checked during a paleontological resources survey.

A paleontological survey of the areas with a PFYC of 3b was completed in September

2009 to more specifically characterize their paleontological sensitivity. This field work included surveys of areas with the potential to yield fossil material, in-field determinations of "low" paleontological sensitivity based on (especially) topographic position and nature of the sediments (e.g., alluvium vs. lacustrine silt), and spot-checking areas with a PFYC of 2 to confirm their low paleontological sensitivity.

Fossil material was discovered in only one restricted part of the CC project area. In the case of most of the CC project area, however, field evidence justifies a downgrade of areas with an initial PFYC of 3b (unknown) to a PFYC of 2 (low). Areas identified in remote imagery as paleospring deposits based on their albedo and hue were found to actually be salt-encrusted playa surface. Playa sediment normally possesses low paleontological sensitivity near the surface because bone and other organic debris are not only quickly oxidized, but also mechanically degraded by the seasonal dissolution and recrystalization of salts in this soil environments.

The location of remaining areas where sediments possess sensitivity is confidential resource information and maps showing these areas are documented separately with the BLM.

Coyote Canyon

Alluvium seldom yields fossils and therefore the alluvial fan sediments that comprise most of the surfaces of Sections 12, 13, 14, 15, 21, and 22 (T24N, R36E) were given a "low" PFYC of 2. Portions of Sections 13, 14, 15, 21, 22, 23, and 24 that were assigned an initial PFYC of 3b (unknown) were subsequently subject to survey and field review. The subsequent field review and survey established the low paleontological potential (PFYC = 2) of all these areas except portions of Sections 14 and 15.

In portions of Sections 14 and 15 subfossil wood consisting primarily of the logs of

pinyon (Pinus monophylla) and Utah juniper (Juniperus osteosperma) were found on the alluvial fans of two of the larger canyons issuing from the Stillwater Range. Similar wood material was observed outside of the project area on the surface on the Cottonwood Canyon alluvial fan several miles to the northeast. Woodland currently lies several miles into the Stillwater Range and more than 1,500 feet higher in elevation. Unlike conventional paleontological material, subfossil wood is simply "mummified" in the dry climate, and its scientific potential lies in its dendrochronological, paleoecological and surface-age dating potential. Therefore, the portions of Sections 14 and 15 where subfossil wood was found were assigned a PFYC Class 4 (high potential).

Soils

Soil types in the project areas were identified using the "Churchill County Area, Parts of Churchill and Lyon Counties" soil survey (U.S. Department of Agriculture National Resource Conservation Service [USDA NRCS], 2009). Descriptions of the soil types found in the lease areas are provided in this section.

Soil unit 343 is the Slaw-Trocken-Chuckles association. Slaw soils occur on 0-4 percent slopes, are well drained, occasionally flood, but never pond, and are moderately to strongly saline. The typical profile is composed of silt loam underlain by stratified very fine sandy loam to silty clay. Trocken soils occur on 0-2 percent slopes, are well drained, occasionally flood, but never pond, and are moderately to strongly saline. The typical profile includes very gravelly loam and gravelly loamy coarse sand. Chuckles soils occur on 0-2 percent slopes, are moderately well drained, never flood or pond, and are moderately to strongly saline. The typical profile is composed of loam and silt loam underlain by stratified very fine sandy loam to silty clay. Soil unit 343 has a slight hazard of off-road or off-trail erosion and is poorly to moderately suited for natural surface road

construction, primarily due to flooding potential and low strength (USDA NRCS, 2009).

Soil unit 184 is the Bluewing-Pineval association. Bluewing soils occur on 4-8 percent sloping fans or washes, are excessively drained, and flood rarely too occasionally, but never pond. The soil profile typically consists of very gravelly loamy sand underlain by stratified very gravelly sand to extremely loamy coarse sand. Pineval soils occur on 4-8 percent slopes, are well drained, and rarely flood and never pond. The typical soil profile includes very cobbly loam and very gravelly sandy clay loam underlain by stratified extremely gravelly sand to gravelly sandy loam. Soil unit 184 has a slight hazard of off-road or off-trail erosion and is moderately suited for natural surface road construction, due to flooding potential, sandiness, and slope (USDA NRCS, 2009).

Soil unit 330 is the Settlement-Louderback-Rustigate association. Settlement soils occur on 0-2 percent slopes, are poorly drained, have a water table depth of 12 to 36 inches, rarely flood and never pond, and are slightly to moderately saline. The typical soil profile consists of silty clay and clay. Louderback soils occur on 0-2 percent slopes, are somewhat poorly drained, have a water table at 36 to 40 inches, rarely flood and never pond, are very slightly or slightly saline, and support saline meadow vegetation. The typical soil profile is composed of sand underlain by stratified sand to loam. Rustigate soils occur on 0-2 percent slopes, are somewhat poorly drained, have a water table at 36 to 40 inches, rarely flood and never pond, and support a saline meadow vegetation community. The profile is typically silt loam underlain by loam. Soil unit 330 has a slight hazard of off-road or off-trail erosion and is moderately suited for natural surface road construction, primarily due to low strength and sandiness (USDA NRCS, 2009).

Soil unit 900 is composed entirely of playa. Playas occur on 0-1 percent slopes, are poorly drained, have a water table at the surface, rarely flood, but have frequent ponding, and are

moderately or strongly saline. The typical soil profile is silty clay loam underlain by silty clay. Soil unit 900 has a slight hazard of off-road or off-trail erosion and is poorly suited for natural surface road construction, primarily due to frequent ponding, wetness, and low strength (USDA NRCS, 2009).

Soil unit 960 is the Kolda-Umberland association. Kolda soils occur on 0-2 percent slopes, are very poorly drained, have a water table at the surface, never flood, but frequently pond, are very slightly or slightly saline, and typically support wetland vegetation. The soil profile is typically silt loam, underlain by silty clay and clay. Umberland soils occur on 0-2 percent slopes, are somewhat poorly drained, have a water table at 18 to 30 inches, rarely flood, but never pond, are moderate to strongly saline, and support wet meadow vegetation. The soil profile is typically a silty clay loam underlain by silty clay. Soil unit 960 has a slight hazard of off-road or off-trail erosion and is poorly to moderately suited for natural surface road construction, primarily due to frequent ponding, wetness, and low strength (USDA NRCS, 2009).

Coyote Canyon

Soil units 184, 343, and 330 are present in the CC project area; a similar number of well pads are planned within each soil unit. The western portion of the CC lease area was not considered in this analysis because no Proposed Action is planned in this area of steep mountainous terrain.

Geology and Minerals

Coyote Canyon

The non-mountainous portions of the CC lease area, where wells would be installed as part of the Proposed Actions, is located at elevations ranging from approximately 3,400 feet to

3,600 feet in the northern part of Dixie Valley. Dixie Valley is a north-northeast/south southwest trending elongated valley in west-central Nevada, within the Great Basin Section of the Basin and Range Physiographic Province. The western edge of Dixie Valley is defined by the Stillwater Range and the eastern edge is defined by the Clan Alpine Mountains. Alluvial fans and pediment surfaces flank the area between the mountains and the valley interior. The proposed project is located on alluvial fans at the base of the Stillwater Range on the western edge of Dixie Valley.

Paleozoic marine carbonate rocks and clastic sedimentary rocks crop out in the Clan Alpine Mountains; however, these rocks have not been penetrated by wells drilled within Dixie Valley. Dixie Valley wells have penetrated marine siltstone, shale, sandstone, and volcaniclastic rocks exposed in the Stillwater Range (Bruton et al., 1997). The Miocene Table Mountain basalt overlies older sedimentary and igneous rocks and has been encountered at a depth of approximately 7,000 to 8,000 feet within Dixie Valley. It is overlain by a thick sequence of late Tertiary basin-fill sediments, including lacustrine, playa, and alluvial fan sediments. Hydrothermal alteration and mineralization from geothermal fluids has locally affected the rocks in the area (Bruton et al., 1997).

Structurally, Dixie Valley is an elongated down-dropped block, or graben, bounded by high-angle faults of Holocene age (Ryall and Vetter, 1982). The Dixie Valley fault lies beneath the west valley edge at the base of the Stillwater Range. Seismic activity subsequent to the tectonism that formed the Dixie Valley graben has further deformed the bedrock, resulting in a complex series of faults in the bedrock beneath the valley floor. Dixie Valley is located in an active seismic area. A major earthquake of magnitude 6.8 occurred in 1954 beneath Dixie Valley and created a visible scarp along the portions of the west margin of Dixie Valley (Ryall and Vetter, 1982).

Livestock Grazing

BLM manages rangelands on public lands under 43 CFR Part 4100 and BLM Handbooks 4100 to 4180. BLM conducts grazing management practices in accordance with BLM Manual H-4120-1 (BLM, 1984).

Under this management, ranchers may obtain a grazing permit for an allotment of public land on which a specified number of livestock may graze. An allotment is an area of land designated and managed for livestock grazing. The number of permitted livestock on a particular allotment on public land is determined by how many animal unit months (AUMs) that land would support. An AUM is the amount of forage needed to sustain one mature cow, five sheep, or five goats for 1 month (BLM, 2008b).

Coyote Canyon

The CC lease area lies within the Boyer Ranch Allotment, which comprises approximately 127,194 acres and 1,789 AUMs of currently authorized grazing capacity. Within this allotment, one AUM is equal to approximately 71 acres. The grazing allotments within the project areas consist entirely of public lands administered by the BLM Carson City Office. Table 15 displays land ownership in the Boyer Ranch Allotment (BLM, 2009b).

Lands

Most of the land in Dixie Valley is federal land managed by the BLM and nearly all of it is designated as having the highest geothermal resource potential of any BLM-managed public lands in the state (BLM, 2001). The federal government administers more than 82 percent of the land in Churchill County. In accordance with the BLM PEIS for Geothermal Development (BLM, 2008a) and the Churchill County Master Plan (2005), the expansion and development of geothermal resources is supported and promoted for federal lands in this region in support of a national energy

policy for renewables. A BLM designated utility corridor exists within Dixie Valley with the express purpose of providing an outlet for geothermal power to be produced in the valley (BLM, 2001). There is a transmission line within this corridor.

Small private parcels exist throughout the valley, and a large portion of the southern half of the valley is controlled by the Department of Defense for testing of low-level supersonic flight operations as part of the Fallon Range Training Complex.

The existing Terra-Gen Dixie Valley geothermal plant is just north of the CC lease area, and a small private ranch is approximately 12 miles northeast of the Dixie Valley geothermal plant. The area is relatively undeveloped and most of the valley is utilized for cattle grazing, with BLM assuming grazing management responsibility on adjacent military-controlled lands.

Several rights-of-way or other authorizations have been granted on public lands within the project areas. These include rights-of-way for transmission lines, roads, and geothermal leases. There are 24 BLM-registered geothermal well leases in the area.

A BLM right-of-way planning corridor exists in Dixie Valley with the express purpose of providing an outlet for geothermal power to be produced in the valley (BLM, 2001). There is an existing 230-kilovolt (kV) transmission line owned by TGP within this corridor. BLM also has prepared a PEIS for Geothermal Leasing in the Western U.S. (BLM, 2008a), which analyzes potential impacts of geothermal development and provides a list of stipulations and best management practices (BMPs) related to geothermal leasing and related development on BLM-managed public land. In 2008, BLM issued a Record of Decision (ROD) for geothermal leasing in the Western U.S., including adoption of Resource Management Plan amendments related to geothermal leasing (BLM, 2008d).

Coyote Canyon

The CC lease area is located in Township 24N, Range 36E, in Sections 2, 9, 10, 11, 12, 13, 14, 15, 16, 17, 21, 22, 23, and 24. The project area is located on land administered by BLM and leased for exploration activities to TGP. The Department of Defense operates the Gabbs North Military Operating Area (MOA) designated for low-level supersonic flight operations in the vicinity of Coyote Canyon.

The BLM Legacy Rehost (LR 2000) Report System and the BLM National Integration Land System (NILS) GeoCommunicator lists several non-producing geothermal leases and lease agreements within the leased area of the CC project, as well as producing leases, owned by TGP, within Sections 12 and 13 (BLM, 2009c). Within Section 12 is a right-of-way granted to the Navy for a remote relay station. Just east of the project area is a road right-of-way associated with the Terra-Gen Dixie Valley 230-kV transmission line, which runs southwest to northeast through Sections 12, 13, 14, 15, 21, and 22 of the lease area. There are also active lode mining claims located across Sections 2, 9,10,11,12, 13, 14, and 15 of the lease area (BLM, 2009c).

(II) The environmental impacts that the construction and operation of the proposed utility facility will have on the project area before mitigation.

Air Quality

Air emissions from the Proposed Actions at the CC site would be primarily attributable to the following air pollution sources:

- Heavy equipment and drill rig (diesel exhaust and GHG emissions)
- Earth moving and grading (particulate fugitive and GHG emissions)
- Well testing (H2S and GHG emissions)

Heavy Equipment, Drill Rig, and Earth-moving and Grading Activities

Fugitive dust emissions during construction and from construction vehicles using the access roads would result in temporary emissions of particulate matter, but these emissions would be of larger particulate sizes and the majority of these fugitive particulate emissions would settle before leaving the leasehold site. Since the proposed total disturbed area is greater than 5 acres for CC, the NDEP Bureau of Air Pollution Control (BAPC) requires a Surface Area Disturbance Permit and corresponding Dust Control Plan. The NDEP BAPC has jurisdiction of air quality programs over all counties in Nevada except Washoe and Clark counties.

Short-term construction and drill rig exhaust emissions, including volatile organic compounds, carbon monoxide, nitrogen dioxide, PM10, hazardous air pollutants, and oxides of sulfur would result from internal combustion engines and heavy equipment used at the construction site. These short-term fugitive emissions would be below the threshold level that would require a permit from NDEP BAPC.

Well Testing

Small quantities of naturally occurring non-condensable gases, such as H2S and GHGs (carbon dioxide and much smaller amounts of methane) would be emitted to the air during well testing. H2S initial concentrations in the CC area geothermal fluids are estimated at

approximately 70 ppm, and methane concentrations are estimated at less than 2 percent of non-condensable gases, based on historical data (Freeman, 1986). This estimate is conservative in that more recent tests at the existing Dixie Valley geothermal plant indicate lower concentrations (TGP, 2009). As discussed in Chapter 2 of this EA, up to 15 slim wells and/or exploration wells at CC would be drilled and performance tested. Well testing would be conducted for an average of 3 days (24 hours per day) for each well. It is anticipated that the initial flow rates of fluid from each well into its reserve pit (and to the existing Dixie Valley sumps, as required) would be approximately 500 to 1,500 gallons per minute on average (with up to 700,000 pounds per hour geothermal flow) depending upon the productivity of the well. Based on this estimate, total potential emissions from the proposed well testing would be approximately 26.40 tons H2S (1.76 tons per well) at site.
Air emission sources that exceed 5 tons per year of criteria air pollutant emissions require an air permit from the NDEP BAPC. This permit would be a temporary permit for operations of less than 1 year duration or a stationary source permit for operations greater than 1 year duration.

The Proposed Actions would each require temporary permits because project-related emissions would be greater than 5 tons per year and performance testing would last less than 1 year. If the total activity duration were extended beyond 1 year, TGP would obtain a stationary source permit.

Heavy Equipment and Well Testing

Cumulative GHG emissions from well testing and construction-related diesel engines were reviewed and determined to be less than 25,000 tons per year, which is below the level that triggers federal reporting requirements.

Additionally, according to State of Nevada regulations, only electrical generating power plants are required to report GHG emissions; therefore, the Proposed Actions would not be required to report GHG emissions.

To minimize air pollution emissions from construction activities and construction and drill rig diesel engines, the following BMPs for fugitive dust and diesel exhaust would be implemented during operational activities:

- Surfacing access roads with aggregate materials, wherever appropriate
- Using dust abatement techniques, such as watering on unpaved, unvegetated surfaces to minimize airborne dust, as needed
- Posting and enforcing speed limits to reduce fugitive dust (speed limit of 15 miles per hour, as necessary)
- Applying dust abatement techniques (such as watering, requiring loader buckets to be emptied slowly, minimizing drop heights, etc.) to earth-moving, excavating, trenching, and grading activities
- Minimizing equipment and vehicle idling times during construction activities

Cultural Resources

Consultation with the SHPO on Determinations of Eligibility and Finding of Effect for cultural resources located within the project area are ongoing, and finalizing the evaluation below

is contingent on completing that consultation process. Following the State Protocol Agreement between the Bureau of Land Management, Nevada and the Nevada State Historic Preservation Office for Implementing the National Historic Preservation Act, 2009, Appendix H. Avoiding Properties, Sections A and B, archaeological resources recommended as eligible will be avoided.

Coyote Canyon

Six archaeological resources were recommended as eligible. Following the State Protocol Agreement between the Bureau of Land Management, Nevada and the Nevada State Historic Preservation Office for Implementing the National Historic Preservation Act, 2009, Appendix H., Sections A and B., the design of the proposed project construction (pads or roads) would be relocated to avoid those sites recommended as eligible. A thirty meter buffer will be placed around historic properties identified within the APE. In the event that any construction overlaps this buffer an archaeological monitor will be on site during the construction.

Native American Religious Concerns

Consultation regarding the CC site between the BLM and federally recognized Native American tribes is ongoing. During consultation for the proposed project following concerns were identified: cultural resources including historic properties; continued access and use of the Dixie Hot Springs for healing and spiritual purposes; and other resources that may be affected by the current project.

Water Quality, Wetlands, and Floodplains

As described in Exhibit "8," Section 2, access roads would be constructed as part of the Proposed Actions. Roads and wells would be located and designed to avoid impacts to surface water features such as springs, seeps, ponds, and ephemeral washes to the extent possible. Well

testing would involve removing thermal groundwater and discharging it to the drill pad reserve pit. Excess fluids from each well would be trucked to existing reserve pits at the Dixie Valley geothermal power plant. The anticipated test flow rates (500 to 1,500 gallons per minute) and durations (average of 3 days) may result in 2 to 6 million gallons of thermal groundwater being extracted from the geothermal aquifer for each well during testing. Installation and testing of deep geothermal wells has the potential to cause impacts on surface water through accidental release of geothermal fluids to surface water features.

The release of hazardous materials to the environment could affect surface water features. BMPs to prevent such a release, including development of a construction Stormwater Pollution Prevention Plan (SWPPP) and spill prevention, control, and countermeasures (SPCC) plan, are described in Exhibit "8," Section 4.1.7.

In addition to these measures, the following steps would be undertaken during construction to avoid or minimize the potential for impacts to surface water or groundwater in the area:

- When permanent new access roads must cross ephemeral washes, rolling dips would be installed. The rolling dips would be designed to accommodate flows from at least a 25-year storm event. Culverts may be used wherever rolling dips are not feasible.
- Drill pad reserve pits would be compacted during construction and settled bentonite clay from drilling mud would accumulate on the bottom of the drill pad reserve pit to act as an unconsolidated clay liner, reducing the potential for drilling fluid to percolate to groundwater.

- TGP would obtain necessary working in waters and/or groundwater discharge permits and provide a Notice of Intent to NDEP prior to well pad construction.
- Wetland boundaries would be avoided to the extent possible.
- A BLM-approved grouting and casing program for construction of slim well and/or exploration wells would be implemented to prevent water quality effects on groundwater during or after well installation.
- Borehole geophysics analyses (cement bond logs) would be conducted to document that well-casing grouting activities provide an effective seal, isolating the geothermal aquifer from shallow alluvial aquifers and therefore minimizing potential impacts on surface washes, springs, seeps, or floodplains.
- BMPs would be implemented to ensure that any geothermal fluid encountered during the drilling does not flow uncontrolled to the surface. These include the use of "blowout" prevention equipment during drilling and the installation of well casing cemented into the ground.
- A hydrologic evaluation plan will be submitted to the BLM for approval prior to drilling.

Surface Water and Groundwater Monitoring Plan

Standard aquifer testing procedures would be employed at targeted depth intervals as the boreholes for slim wells and/or exploration wells are advanced. The vertical boundaries of the aquifers, the depth of aquifers (non-thermal and thermal) penetrated during drilling, would be noted

from the drilling log. The horizontal boundaries would be noted if any are reflected on time-drawdown plots produced during aquifer testing. Borehole geophysics analysis would be conducted from the ground surface to the total depth of the borehole.

Aquifer testing would be used to determine drawdown associated with pumping. If possible, an assessment of whether the aquifer is confined or unconfined would be made, as well as an estimate of aquifer thickness and a qualitative assessment of its relative productivity. The temperature of penetrated aquifers would be noted. A hydrologic evaluation plan would be put in place to confirm the expectation that no impacts to quality, quantity, or temperature of surface water and groundwater occurred as a result of slim well and/or exploration well installation and testing.

Selected seeps and springs, determined in consultation with BLM, would be monitored for basic water quality, flow, and temperature prior to and during the Proposed Actions.

Coyote Canyon

Palustrine emergent wetlands associated with springs and seeps are present within the CC lease area in Sections 23 and 24. Based on a review of USGS topographic maps and NDWR groundwater basin mapping, these water bodies are not jurisdictional waters of the U.S. because they are located in an internally drained desert basin that is distant from and lacks hydrographic connectivity to major rivers and water bodies. A request for jurisdictional determination concurring with this finding is pending from the U.S. Army Corps of Engineers. Although the waters are not jurisdictional waters of the U.S., construction activities would avoid wetland areas associated with seeps and springs to the extent possible.

Biological Resources

Vegetation

Impacts to vegetation would be minimized by reseeding all areas of access roads and well pads not required for subsequent energy production using a BLM-approved native seed mixture. Topsoil would be salvaged whenever possible and reused in a timely manner.

Coyote Canyon

The specific locations of the 15 wells to be installed at CC would be determined prior to drilling. This analysis conservatively assesses impacts based on the potential maximum number of well locations identified within each vegetation type to identify impacts to vegetation, even though the area disturbed by CC exploration activities would not be more than 73 acres.

According to SWReGAP analysis, up to 20 acres of disturbance could be located on intermountain basins playa, which is generally lacking vegetation, although scattered salt tolerant communities also occur (USGS, 2004). Implementing the Proposed Actions could lead to the disturbance of up to 62 acres of intermountain basins mixed salt desert scrub and up to 17 acres of salt-tolerant communities. In addition, disturbance could occur to small areas of fringing wetland vegetation associated with seeps and springs in the vicinity of well pads and access roads on the margin of the playa; however, this disturbance would be minimized by implementation of the BMPs.

Invasive, Non-native Species

The Proposed Actions have the potential to increase the spread of invasive, non-native species. Weed seeds can germinate when soils are disturbed by construction activities, particularly where available soil moisture is increased by application of water for dust suppression. Weeds also could be introduced by construction equipment brought to the project from infested areas or by the

use of seed mixtures or mulching materials containing weed seeds.

The potential for the Proposed Actions to increase the spread of invasive, non-native species would be minimized through the use of BMPs, including mapping and treating weed infestations prior to disturbance or during construction, and use of certified weed-free seed and mulching materials.

A noxious weed control program consisting of monitoring and eradication for species listed on the Nevada Designated Noxious Weeds List (NRS 555.010) also would be implemented. With implementation of these measures, no long-term impacts associated with invasive, non-native species are anticipated.

Migratory Birds

Direct impacts stem from approximately 73 acres of actual habitat that would be disturbed in CC during the life of the Proposed Action, although effective habitat loss from the disturbance and fragmentation may encompass a larger area for some species. Construction, human activity, and increased noise in the area from construction and drilling could temporarily displace migratory birds from the area. However, large tracts of similar habitat are found adjacent to the project areas, and migratory birds would likely return to the area after construction.

The Migratory Bird Treaty Act (MBTA) analyzes requirements related to ground-disturbing activities during the migratory bird nesting season. To meet these requirements, habitat for migratory birds would be eliminated within areas of proposed disturbance prior to the nesting season. In the event this elimination measure is not implemented, if ground disturbing activities do take place during the migratory bird nesting season, migratory bird nest surveys would be conducted early in the nesting season by a qualified biologist acceptable to BLM. This survey

would be conducted to identify either breeding adult birds or nest sites within the specific areas to be disturbed. If active nests are present within these areas to be disturbed, TGP would coordinate with BLM to develop appropriate protection measures for these sites, which may include avoidance, construction constraints, and/or the establishment of buffers.

To minimize impacts to migratory birds and other wildlife, in addition to the management practices described above, well pads and roads would be recontoured and reseeded following completion of the Proposed Actions as described in Exhibit "8," Section 2. Erosion-control measures would be implemented as described in Exhibit "8," Section 4. Topsoil would be salvaged and reused whenever possible and in a timely manner.

Sensitive Species

Threatened and Endangered Species

Because no threatened or endangered species were observed during field surveys or are known to exist in the CC lease area, there would be no impacts to threatened or endangered species from the Proposed Action (BLM, 2003; USFWS, 2009a; USFWS, 2009b).

BLM Sensitive Species

Sage grouse may use the project area as a water source. Mitigation measures would be implemented to minimize impacts to water resources; therefore, negligible impacts to sage grouse are expected as a result of implementation of the Proposed Actions.

No sensitive bat roosting habitat is expected to be disturbed due to implementation of the Proposed Actions. However, direct impacts stem from approximately 73 acres of actual habitat that would be disturbed in CC during the life of the Proposed Action, although effective habitat loss from the disturbance and fragmentation may encompass a larger area for some bat species. Bat

species in the area are insectivorous and it is not expected that insect populations would be adversely affected by construction activities. There are large tracts of similar habitat in the vicinity of the project area for bats to forage; therefore, no impacts to sensitive bat species are anticipated.

In the project area for CC, resident BLM sensitive avian species (including golden eagle, ferruginous hawk, prairie falcon, and loggerhead shrike) and breeding sensitive avian species (such as burrowing owl and vesper sparrow) would lose approximately 73 acres of habitat at each site as a result of the Proposed Actions. Effective habitat loss from disturbance and fragmentation may encompass a larger area for some avian species. Indirect effects from noise and increased human activity could temporarily displace and reduce breeding success of these sensitive avian species; however, the species would be able to return to the disturbed areas upon completion of ground-disturbing activities. No population-level impacts to the sensitive avian species are expected as a result of implementation of the Proposed Actions. Because sensitive avian species would likely return to the area after construction is complete and because similar habitat is available near the project area, impacts to sensitive avian species are expected to be minor from implementation of the Proposed Actions. There are large tracts of similar habitat in the vicinity of the project area; therefore, no impacts to BLM sensitive avian species are anticipated.

Impacts to BLM sensitive species associated with marsh habitats (e.g., northern leopard frog, sandhill crane, snowy plover, black tern, long-billed curlew, and least bittern) would be similar to avian species described above.

Bighorn sheep habitats within the Stillwater Range are not anticipated to be disturbed by construction or drilling activities because drilling and road construction would not occur in these areas. Therefore, no impacts to bighorn sheep are expected as a result of the implementation of the

Proposed Actions.

Wildlife Resources

Coyote Canyon

Direct impacts to wildlife species stem from disturbance of approximately 73 acres of actual habitat, although effective habitat loss from disturbance and fragmentation may encompass a larger area for some species. Because the specific locations of the 15 wells to be installed would not be determined until drilling begins, the potential habitat impacts are calculated based on the worst-case scenario for each habitat type (assuming the maximum number of wells in each habitat type). As a result, the total acreage impacts reflected in this analysis add up to more than 73 acres. Up to 62 acres of intermountain basins mixed salt desert scrub, up to 17 acres of intermountain basins greasewood flat/saltgrass meadows/iodine bush scrub, and up to 20 acres of intermountain basins playa habitat could be disturbed by implementation of the Proposed Actions. In addition, disturbance may occur to small areas of fringing wetland vegetation associated with seeps and springs in the vicinity of well pads and access roads on the margin of the playa; however, this disturbance would be minimized by implementation of the BMPs.

Construction of access roads and installation of wells would result in direct loss of habitat. Direct impacts from mortality to smaller, less mobile species could occur during construction if those species are present. Noise, human presence, and heavy equipment present during construction activities are likely to temporarily displace wildlife that may be present or near the project area and could have an indirect effect on wildlife species in the area. These indirect effects could reduce breeding success of species that are sensitive to human activity. These impacts are expected to be temporary and short term for the duration of the proposed construction and drilling

activities. Wildlife would be able to return to the disturbed areas upon completion of ground-disturbing activities. No population-level impacts to wildlife species are expected as a result of implementation of the CC Proposed Action. Because wildlife would likely return to the area after construction is complete and because similar habitat is available near the project area, impacts to wildlife are expected to be minor from implementation of the CC Proposed Action.

Wastes, Hazardous or Solid

Diesel fuel, lubricants, hydraulic fluids, and drilling chemicals (drilling mud, caustic soda, barite, etc.) would be transported to, stored on, and used at both project areas. The Proposed Action must conform to federal and state requirements for handling these hazardous materials. Typical of most construction projects, the storage and use of these materials could result in minor, incidental spills of diesel fuel or oil to the ground during fueling of equipment, filling of fuel storage tanks, and handling lubricants. Other incidental spills could be associated with equipment failures such as ruptured hoses. Management practices, including development of a spill plan, use of secondary containment structures, and worker training, would be used to prevent the release of hazardous wastes to the environment. Solid wastes would be transported offsite to a landfill. Implementation of these procedures would prevent or minimize potential impacts on the environment due to generation of hazardous or solid wastes.

Visual Resources

Temporary impacts to visual resources would occur during road and well pad construction activities at the project area and as a result of the presence of drill rigs. Drilling equipment would be seen from Dixie Valley Road. Roads, drill pads, and laydown areas are near ground level and would not affect visual resources. Construction impacts would be minor and

short-term and would be consistent with the objectives of Class IV VRM objective.

During the drilling operations, the drill rig could extend up to about 160 feet above ground level. These operations would be 24 hours per day, 7 days per week. During drilling operations, the rig would be visible at distances of greater than 1 mile from the respective drill site, and lights used when drilling at night would increase rig visibility. All drill rig and well test facility lights would be limited to those required to safely conduct the operations and would be shielded and/or directed in a manner that focuses direct light to the immediate work area.

Access roads would remain after the wells have been drilled until reclamation is conducted. Laydown areas and concrete slab drill pads would be removed if they are no longer needed.

The Stillwater Mountain Range, with peaks higher than 8,500 feet, is between the CC lease area and Lovelock. The CC project area is, therefore, not visible from the Lovelock area. The CC project area is located approximately 14 miles away from The 7 Devils Ranch and is not likely to be visible.

Paleontological Resources

Direct impacts to paleontological resources could result from the mechanical destruction of fossils as a consequence of uncontrolled excavations of paleontologically sensitive sedimentary units. This includes grading, and excavating and drilling. Other activities, such as laying roadway gravel over the top of paleontologically sensitive sediment, would have little or no impact on paleontological resources. Indirect effects to paleontological resources could include unauthorized fossil collection after fossil-rich sediment is exposed by excavation, in the absence of measures to restrict public access to such sites or to educate workers on paleontological resource avoidance.

Coyote Canyon

Construction activities that include surface disturbance of the immediate subsurface at one well pad (Well 61-15) would have the potential to impact paleontological resources because subfossil wood occurs in the immediate vicinity (PFYC = 4). Prior to construction at this site, this impact would be mitigated by moving the location of Well 61- 15 to the west away from this resource, staking for avoidance that area within Sections 14 and 15 where subfossil wood exists, subsequent avoidance of the area during construction, and by worker education that would include the importance of paleontological resources avoidance.. The paleontological potential of the other 24 well pads and their access routes is low (PFYC Class 2), and therefore impacts to paleontological resources are not expected.

Of the 25 well sites in the CC area, only one possesses high (PFYC Class 4) paleontological sensitivity (Well 61-15), because of the presence of subfossil wood on the surface in the immediate vicinity. The subsurface potential of all well pads in the CC area is considered to below (PFYC Class 2) because they are located at sites underlain by alluvium or oxidized playa sediments. Impacts to paleontological resources from project development in the CC area would therefore not occur because the one area designated PFYC Class 4 (high sensitivity) will be avoided by relocation of the well pad, and by educating workers on paleontological resources avoidance.

Soils

The hazard of off-road or off-trail soil erosion in the project areas is slight (USDA NRCS, 2009). The soils are poorly to moderately suited for natural surface road construction (USDA NRCS, 2009); therefore, TGP would implement the BMPs described below when constructing access roads and well pads.

The loss of soil productivity is expected to be low because the soils have low native fertility and no farmlands, as covered under the Farmland Protection Policy Act (Public Law 97-98, 7 USC 4201), are present within the CC lease area.

The release of hazardous materials to the environment could affect soil resources. BMPs to prevent such a release, including development of a SPCC plan.

Erosion and loss of soil productivity would be minimized by implementing the following BMPs during access road and well pad construction:

- Excavation into native soil during construction of well pad reserve pits would be minimized to the maximum extent possible.
- Wells and roads not required for development purposes would be re-contoured to blend with the surrounding topography, in accordance with lease stipulations.
- Topsoil would be salvaged and reused whenever possible and in a timely manner.
- Temporarily disturbed areas would be reseeded where previously vegetated using a BLM-approved seed mixture.
- Erosion control measures, including but not limited to silt fencing, diversion ditches, water bars, temporary mulching and seeding, and application of gravel or rip rap, would be installed where necessary immediately after completion of construction activities to avoid erosion and runoff.
- Access roads would follow existing contours to the maximum extent possible. In areas where new access roads must be constructed across slopes,

erosion control measures would be installed as necessary, in accordance with Gold Book standards (BLM, 2007a).

- An average of 6 inches of gravel would be used as road surface because roads would be used during all seasons. Up to 3 feet of gravel may be used on some sections of road, and no gravel would be used on road sections where the natural surface is adequate.
- Additional gravel would be laid down when ground conditions are wet enough to cause rutting or other noticeable surface deformation and severe compaction. As a general rule, if vehicles or other project equipment create ruts in excess of 4 inches deep, a gravel surface would be installed prior to additional use.
- When construction occurs in areas of very soft soils, up to 3 feet of aggregate would be used.
- An NDEP BAPC Surface Area Disturbance documenting the BMPs to be used would be required for the project because the surface disturbed would be greater than 5 acres.
- Overland route corridors may be used for infrequently accessed locations.

Coyote Canyon

Construction of roads and well pads in the CC project area could disturb up to 73 acres (see Table 6 of Exhibit "7"). Erosion and loss of soil productivity would be minimized as described above.

Geology and Minerals

A history of recent (1954) seismicity and the presence of hot springs on the surface trace of the Dixie Valley fault zone led Ryall and Vetter (1982) to suggest that Dixie Valley would have a relatively high potential for induced seismicity if injection of geothermal fluids into deep wells occurs. Because the exploration activities described in this document do not involve injecting fluids into the slim wells and/or exploration wells, induced seismicity is not expected to occur related to exploration activities.

Livestock Grazing

As outlined in Tables 6 and 7 of Exhibit "7", the proposed projects would collectively disturb up to 146 acres (73 acres for CC) within various grazing allotments. To maintain flexibility in location of slim wells and/or exploration wells, TGP is proposing 25 potential well locations at CC. However, a maximum of 15 slim and/or exploration wells would be drilled in each project area. Conservatively, it is estimated that up to 2.81 AUMs, or less than three one-hundredths of one percent of the 10,521 AUMs within the three grazing allotments, would be compromised by disturbance from the projects. Due to this small disturbance, there is no impact to the AUMs from the Proposed Actions, and no reduction in authorized grazing use would be required. All activities for both projects are located away from sources of water in the vicinity and would not compromise livestock access to available water sources.

Coyote Canyon

The CC Proposed Action could disturb up to 73 acres, less than one percent of the 127,194 acres comprising the Boyer Ranch Allotment, reducing the 1,790 AUMs within the allotment by approximately 1.02 AUMs. No reduction in authorized grazing use would be required.

Lands and Realty

Existing linear rights-of-way in the vicinity of the CC lease area includes the Terra-Gen Dixie Valley 230-kV transmission line and its associated access road and State Route 121 to the south, which would be used only for access to the project areas. The Proposed Actions do not include drilling or other exploration activities in the State Route 121 right-of-way. The use of the lands for geothermal development would not preempt the other current uses of the land.

The Department of Defense operates the Fallon Range Training Complex, a portion of an MOA designated for low-level supersonic flight operations over the Dixie Valley region. Impacts to the MOA are reviewed by the Federal Aviation Administration (FAA) if the FAA obstruction thresholds are triggered.

The Proposed Actions would not trigger the FAA obstruction thresholds (14 CFR Part 77.13) because they would not include:

- Construction or alteration exceeding 200 feet above ground level
- Construction or alteration
- Within 20,000 feet of a public use or military airport which exceeds a 100:1 (horizontal:vertical) surface from any point on the runway of each airport with at least one runway more than 3,200 feet
- Within 10,000 feet of a public use or military airport which exceeds a 50:1 surface from any point on the runway of each airport with its longest runway no more than 3,200 feet
- Within 5,000 feet of a public use heliport which exceeds a 25:1 surface
- Highway, railroad, or other traverse way whose prescribed adjusted height

would exceed the above noted standards

- Construction or alteration located on a public use airport or heliport regardless of height or location

(III) The environmental impacts that the construction and operation of the proposed utility facility will have on the project area after mitigation.

Air Quality

Air quality impacts from the Proposed Actions at CC and would consist only of temporary impacts during well construction, including fugitive dust from construction vehicles and hydrogen sulfide emissions during well testing. If well installation activities are performed concurrently at other sites, the Proposed Actions could contribute to a cumulative temporary increase in fugitive dust and hydrogen sulfide emissions. These impacts would be minimized through the use of as the management practices.

Cultural Resources

The Proposed Actions have been designed to avoid identified cultural resources in Dixie Valley. Increased traffic and activity in the lease area, when combined with traffic from other current and potential future activities, could cause an incremental additional risk of unintentional disturbance of cultural resource areas. BMPs would be used to prevent or minimize unauthorized or unintentional disturbance of cultural resource areas.

Native American Concerns

Much of the state of Nevada is part of the traditional Paiute and Western Shoshone lands occupied for centuries before Europeans arrived, and the land maintains cultural significance for the Native American community. Over the last couple of decades more activities have begun

encroaching on what has been a largely unpopulated and pristine environment. Increases in livestock grazing, oil and gas exploration, geothermal exploration and development, mining, and recreational activities such as OHV, hunting and fishing, hiking, and mountain biking have become more common in the vicinity. These multiple uses, and the increased frequency of them, contribute to the overall decline in cultural resource sites and traditional cultural properties significant to the spiritual or cultural identities of the Native American Tribes.

In order to minimize the potential cumulative contribution of the Proposed Actions to impacts such as these, BLM Stillwater Field Office and the affected Tribal organizations need to maintain an open and honest dialog in managing public lands. All interested parties need to remain flexible in their approach to making decisions on how to administer the multiple activities taking place on public lands. Through productive communications and understanding the needs of the other parties, the decisions made on how to manage the land can reduce or eliminate impacts to any party's interests on public lands.

Water Quality and Water Quantity

When combined with other current and potential future area activities, such as other geothermal development, there would be an increased potential for impacts to surface water and groundwater quality. Potential impacts to groundwater quality would be minimized through the use of BMPs for well construction. Percolation of geothermal fluids from well testing could have a temporary local impact on groundwater quality and water levels. Potential impacts to surface water would be temporary and local, and also would be minimized through the use of BMPs.

Biological Resources

The Proposed Actions would have impacts to biological resources. Vegetation and

habitat would be disturbed and removed, and invasive, non-native plant species may spread as a result of the Proposed Actions. Other development in the area may also remove vegetation and increase growth of invasive species. However mitigation measures including reseeding of disturbed areas and monitoring of invasive species would reduce potential impacts. Wildlife habitat, including habitat for migratory birds and BLM sensitive species, could be disturbed or removed due to other development in the area. Human activity and noise could displace wildlife to surrounding areas. However, similar abundant habitat is found in the area and region, and reseeding of disturbed areas could re-establish wildlife habitat. Overall, the Proposed Action would have a negligible contribution to cumulative effects on biological resources within the analysis area.

Wastes, Hazardous or Solid

Solid waste and hazardous materials would be transported, stored, and used as part of the Proposed Actions. When combined with other area activities, the increase in the total volume of wastes handled would result in an increased risk of spill or other release of waste materials to the environment. Implementation of the BMPs would minimize the potential for wastes and hazardous materials to be released to the environment.

Visual Resources

Visual impacts from the Proposed Actions would be limited and would occur primarily during the construction process. If other geothermal exploration activities associated with the existing geothermal leases were to take place at the same time, the Proposed Actions could contribute to a temporary cumulative impact on visual resources. This contribution would be largely limited to the duration of construction when drill rigs are present onsite because any remaining structures would be low-level and not visible from a distance.

Paleontological Resources

Paleontological resources would be disturbed through implementation of the Proposed Actions. Such disturbances, when combined with disturbances from other current and future activities that disturb the surface and subsurface of the land, would have a cumulative impact on paleontological resources. However, implementation of BMPs to prevent unauthorized or uncontrolled disturbance of the land would limit the impacts.

Soils

Soil erosion could be caused by the combination of the Proposed Actions along with other current and potential future area activities. The contribution of the Proposed Actions to soil erosion would be minimized through the use of the BMPs.

Geology and Minerals

Because there are mining claims within the lease area, it is possible that the Proposed Actions could occur simultaneously with use of the area by mineral claimants. There are currently no mining Plans of Development identified within the project area. Therefore, the Proposed Actions are not expected to negatively impact mining claims in the lease area.

Livestock Grazing

Because the Proposed Actions would result in a reduction of AUMs of less than 1 percent, no reduction in authorized grazing capacity would occur. No other forage-disturbing activities are known to be planned in the area

Lands and Realty

The Proposed Actions are consistent with BLM land use planning for the area and would not interfere with other ongoing or reasonably foreseeable future activities, and therefore

would not contribute to cumulative impacts on land use.

8. Unless, pursuant to paragraph (b) of subsection 1 of NRS 704.890, the proposed utility facility is exempt from the requirement that the Commission find and determine the extent to which the proposed utility facility is needed to ensure reliable utility service to customers in this State, an explanation of the extent to which the proposed utility facility is needed to ensure reliable utility service to customers in this State, including:

(a) If the proposed utility facility was approved in a resource plan or an amendment to a resource plan, a reference to the previous approval by the Commission.

Not applicable.

(b) If the proposed utility facility was not approved in a resource plan or an amendment to a resource plan, a description of the extent to which the proposed utility facility will:

(1) Provide utility service to customers in this State.

Not applicable.

(2) Enhance the reliability of utility service in this State.

Not applicable.

(3) Achieve interstate benefits by the proposed construction or modification of transmission facilities in this State, if applicable.

The project will enhance the reliability of the electric grid which serves the western region of the United States.

9. An explanation of how the need for the proposed utility facility as described in subsection 8 balances any adverse effects on the environment as described in subsection 7.

The Coyote Canyon Project is designed to meet the need for clean, renewable, electric power. The state of Nevada possesses the potential of being the greatest supplier of geothermal

electric energy in the United States. As stated in the environmental assessment, it is the policy of the United States Department of the Interior to encourage the development of geothermal resources on federal lands. Development of these resources reduces this nations reliance on foreign sources of fossil fuel, promotes natural security, diversifies energy portfolios and contributes to the reduction of greenhouse gas emissions. Moreover, the construction of the Coyote Canyon Project will result in the creation of significant employment during the construction phase of the project as well as employment for ongoing maintenance and operation of the facility.

During construction of the proposed facility it is anticipated that as many as 250 workers will be employed over a period of approximately 16-18 months. The operation of the plant will result in 16 full-time positions. In addition, the project will result in increased property taxes for Churchill County, royalties paid to the Minerals Management Service, the State of Nevada and to Churchill County and revenues to local businesses from the procurement of goods and services associated with large construction projects.

10. An explanation of how the proposed utility facility represents the minimum adverse effect on the environment, including:

(a) The state of available technology.

and

(b) The nature of various alternatives.

<u>Flash System with Steam Turbine Generator</u>

The steam turbine generator (STG) would be a skid mounted, dual admission, condensing type turbine. The STG would be installed with a condenser at its discharge and would be supplied with the necessary auxiliary equipment for control and speed protection, bearing lubrication and gland sealing. The STG would be coupled to a totally enclosed synchronous

generator. The generator would rotate at 3600 revolutions per minute (rpm). The terminal voltage would be 13.8 kV, 3 phase, 60 hertz. The generator would be supplied with a brushless or static excitation system and auxiliary control system. The condensed steam would then be used for process water make-up or sent to the brine return surge tank for reinjection.

The HP and low pressure (LP) vessels at the entry points of the STG would have internal demistor pads for removing moisture from the steam prior to entering the steam turbine. The entire LP steam supply would be piped to the main turbine for power production. The spent brine would exit the bottom of the LP flash vessel and flow by gravity to the brine return surge tank for subsequent injection back into the reservoir. The HP and LP flash vessels would be vertical steel vessels.

The turbine governing valves control the steam flow to the turbine to maintain set power production. This in turn provides back pressure and establishes the pressures in the flash system. Steam relief valves on both the HP and LP steam lines would be actuated when the steam pressure exceeds set operating pressures. The steam would be vented to an above grade rock box located adjacent to the plant site until steam pressures are relieved back down to the set operating pressures.

Binary Organic Rankine Cycle Units

The binary power conversion process utilizes the Organic Rankine Cycle (ORC) technology to extract heat from the geothermal fluid. The ORC units would use a secondary organic working fluid, such as pentane (C_5H_{12}), isopentane (C_5H_{12}), butane (C_4H_{10}), isobutene (C_4H_{10}) or a refrigerant such as R245fa, which would extract heat from the steam/brine. The working fluid is vaporized, due to a lower boiling point, in the preheater and vaporizer to drive special organic fluid

turbines before it is condensed by in the air cooled condensers. It then repeats the process as it is operated in a closed loop system. The turbine rotates at between 1,800 and 3,600 rpm and drives a generator, which produces grid compatible power.

The binary cycle would produce the same amount of non-condensable gas (NCG) that the flash system would generate since about 95 percent of the NCGs come out of solution in the HP separator and would have to be removed when the steam is condensed in the ORC heat exchangers. The ORC unit would produce a small amount of NCG, which would be periodically vented to a vapor recovery unit. This vapor recovery unit removes the volatile organic compounds (VOCs) from the non-condensable vent gases. The NCG is extracted periodically during normal operation from the ORC unit condenser.

Geothermal Combined Cycle

A geothermal combined cycle utilizes both flash and binary systems working together as a single unit. The size and design of the exact arrangement would be optimized during the detail design phase, once resource data is obtained in the drilling program. A likely configuration would operate with the two-phase brine being separated in the HP separators into the HP steam and HP brine lines. The HP steam would be transferred into an extraction steam turbine that discharges the steam at a pressure between 10-40 pounds per square inch gauge (psig) instead of a backpressure near 0 psig as in the flash system. The extracted steam, that would otherwise be condensed using water from the cooling towers for heat rejection, is sent to a binary ORC unit that condenses the steam as heat is transferred to the binary system to power the ORC cycle. Instead of being flashed in a LP separator, brine from the HP separator would be transferred to additional binary ORC units and combined with the steam condensate after the first ORC unit to provide additional power

generation. The combined cycle would allow for better resource utilization of the brine as additional heat extraction would generate greater overall efficiencies than the flash system would provide for electrical generation. The ORC unit would use a secondary (that is, binary) organic working fluid, such as pentane or a refrigerant such as R245fa, which would be sent through a vaporizer and pre-heater and then condensed in an air cooled condensers. The turbines would drive a generator, which produces electricity.

The combined cycle would produce the same amount of NCG that the flash or the binary system would generate. The ORC unit would produce a small amount of NCG, which would be periodically vented to a vapor recovery unit. This vapor recovery unit removes the VOCs from the non-condensable vent gases. The NCG is extracted periodically during normal operation from the ORC unit condenser.

Heat Rejection System

Each of the three plant designs describe (flash, binary and geothermal combined-cycle) would use a dry cooling system or a hybrid cooling system. Using dry cooling technologies would allow for the elimination of evaporating water in the cooling cycle. In direct dry cooling systems, also known as air-cooled condenser, fans blow air over a radiator system to remove heat from the system via convective heat transfer (instead of once-through cooling or evaporative heat transfer). In the direct dry cooling system, exhaust steam or vapor from the turbine exhausts directly to a manifold radiator system that rejects heat to the atmosphere by forcing air over the copper tubes, condensing the vapor inside the radiator. This is the most common dry cooling system in use in the United States.

In the flash system, air cooling would provide several technical difficulties adjusting

to the high variations of backpressure caused by the changing air temperatures. The design of the STG is greatly affected by the discharge pressure changes on the backpressure designed steam turbines. The high variability of the air cooled condensers on the steam turbines may cause the blades to vibrate, fracture and break, creating several unplanned and long repair shut downs. Control would be put into place to prevent this, but would cause the plant to shut down when air temperatures reach above a certain degree in the summer when the power is required the most from the utilities. These technical difficulties may require the use of a limited amount of water (up to 500 acre-feet per year, which is less than the 3,400 acre-feet per year that a wet-cooling system may have lost through evaporation) during hot weather conditions.

The addition of a limited amount of water to a dry-cooling system creates a hybrid cooling systems. A hybrid cooling system combines wet and dry cooling technologies. These systems reduce cooling water quantities by 85 percent from that needed for wet cooling (from 3,400 acre-feet per year down to 500 acre-feet per year).

Examples of hybrid-cooling systems could include: I) a parallel system (using dry and wet in parallel), or ii) misting system adding water to the air inlet of an air-cooled condenser or iii) a packing system design to load moisture into the air inlet. The hybrid-system would be capable of protecting equipment during hot weather condition and/or increase system performance.

Spray-enhanced dry cooling is a type of hybrid water conservation cooling system through which the inlet ambient air is pre-cooled and humidified with spray, or forced through a humidifying packing material before it reaches the air-cooled condensers. This system uses about 15 percent of the water used for wet cooling systems, but reduces the capacity loss that occurs with

an all dry cooling system and can help protect the equipment during certain hot weather conditions.

Variations of spray-enhanced dry cooling have been tested at the Mammoth Pacific geothermal power facility in California, which is one of the world's first air-cooled geothermal binary cycle power plants. To date, there have been no hybrid cooling systems utilized at traditional flash geothermal facilities.

A parallel system combines a traditional dry cooling system to a smaller wet cooling system used mainly during hot and dry weather conditions.

(c) The economics of various alternatives.

As in all construction projects of the magnitude being considered, economics is a pivotal factor. The construction of a geothermal power plant is typically financed through a combination of debt and equity. A lender or lenders will independently evaluate the viability of the project from the standpoint of resource adequacy, access to transmission, the power sale and purchase agreement and a variety of other considerations. The technology selected for the operation of the plant will be dictated primarily by the quality and quantity of the resource. Terra-Gen has over 22 years of operating experience at Dixie Valley and believes that the Coyote Canyon resource will be similar to the resource being utilized at the nearby Dixie Valley Plant. As such, there is an expectation that any of the three technologies being considered may be a viable option. A final decision on the design of the plant cannot be determined until a sufficient number of exploration wells have been successfully completed and flow-tested that confirm that there is commercial resource adequacy for the operation of the plant over the life of the contract.

11. An explanation of how the location of the proposed utility facility conforms to applicable state and local laws and regulations, including a list of all permits, licenses and approvals required by federal, state and local statutes, regulations and ordinances. The explantion must include a list that indicates:

(a) All permits, licenses and approvals the applicant has obtained, including copies thereof.

(1) The Environmental Assessment for Geothermal Exploration described in Section B.3. above, dated April, 2010.

(2) The Environmental Assessment for Geothermal Utilization described in Section B.3. above, dated November, 2010.

(3) TGP has obtained five geothermal leases from BLM for the Coyote Canyon Project. See, Exhibit "4."

(4) A special use permit from Churchill County, dated January 19, 2011. See, Exhibit "9."

(5) BLM Geothermal Drilling Permits. See, Exhibit "10."

(b) All permits, licenses and approvals the applicant is in the process of obtaining to commence construction of the proposed utility facility. The applicant must provide an estimated timeline for obtaining these permits, licenses and approvals.

A table of these licenses, permits, and approvals is attached hereto as Exhibit "11."

12. An explanation of how the proposed utility facility will serve the public interest, including:

(a) The economic benefits that the proposed utility facility will bring to the applicant and this State.

The Coyote Canyon project will require approximately 250 jobs during the construction phase of the project. In addition, the project will require 16 full time positions for ongoing operations and maintenance of the facility. Churchill County will see an increase in its tax base which will result in an increase in tax revenue to the county. The BLM will receive ongoing

lease payments for the leasehold utilized by the project. The generation of electric energy from geothermal resources at the site will result in increased energy supplies to the western region.

(b) The nature of the probable effect on the environment in this State if the proposed utility facility is constructed.

Electricity produced from geothermal power plants requires significantly less surface disturbance when compared to conventional fossil fuel plants and also when compared to other forms of renewable energy facilities such as solar and wind. Biological, cultural and wildlife surveys have been conducted on the project area to determine the effect that a development may have on the environment. The Environmental Assessment issued by the Bureau of Land Management takes all aspects of the proposed development into consideration and has imposed conditions that are designed to minimize the impact on all resources potentially affected by the proposed project. TGP is working collaboratively with the BLM to develop a water monitoring plan that will be designed to insure that production and injection of geothermal fluids does not negatively impact the near-surface aquifer. Given that there is an existing 230kV electric transmission line owned by an affiliate of the applicant, the need for surface disturbance associated with the construction of a new transmission line is greatly reduced. It is anticipated that less than one-half mile of new transmission will be required to inter-connect with the existing line. In general, the project will be designed to minimize surface disturbance of any kind and to completely avoid areas that are culturally or biologically sensitive.

(c) The nature of the probable effect on the public health, safety and welfare of the residents of this State if the proposed utility facility is constructed.

The generation of clean geothermal energy in the state of Nevada will have no adverse impact on the public health, safety and welfare of the residents of this state. Production of

geothermal electric energy will displace energy production utilizing fossil fuels such as coal and natural gas. As stated above, residents of the state of Nevada will benefit from the creation of new jobs in the state both during construction and operation of the facility. Moreover, the Coyote Canyon project will produce portfolio energy credits which will be available to public utilities in the State of Nevada.

Diversification of the source of electricity is known to bring stability to the markets that serve consumers and, as such, geothermal energy projects that produce baseload power are beneficial to the residents of Nevada.

(d) The interstate benefits expected to be achieved by the proposed electric transmission facility in this State, if applicable.

The Coyote Canyon project will connect to TGP's radial line which connects the Controls Substation near Bishop, California and contributes to power needs and enhanced reliability in the grid in the western region.

12. A copy of a draft notice pursuant to NAC 703.162.a

Attached hereto as Exhibit "12" is a copy of the draft Notice of Application pursuant to NAC 703.162.

C. REQUEST FOR RELIEF

TGP respectfully requests that the Commission issue its Order:

1. Granting TGP a permit to construct the Coyote Canyon Project; including conditions and modifications that allow for the issuance of a UEPA permit to construct or a compliance order setting forth conditions that TGP may comply with prior to commencing construction of the proposed project; and

2. For such other and further relief that the Commission may find just and reasonable.

Respectfully submitted this 15th day of June, 2011

ALLISON, MacKENZIE, PAVLAKIS,
WRIGHT & FAGAN, LTD.
402 North Division Street
P.O. Box 646
Carson City, NV 89702

By: Patrick V. Fagan
PATRICK V. FAGAN, ESQ.

CERTIFICATE OF SERVICE

I hereby certify that I am an employee of ALLISON, MacKENZIE, PAVLAKIS, WRIGHT & FAGAN, LTD., and that on this date I served a copy of the foregoing document entitled "Application of TGP Dixie Development Company, LLC for a Permit to Construct the Coyote Canyon Geothermal Electric Generation Project" pursuant to the Nevada Utility Environmental Protection Act, by mailing a copy thereof, properly addressed, with postage prepaid to the following:

Nevada State Clearing House
Department of Administration
Budget and Planning Division
209 E. Musser St., Room 200
Carson City, NV 89701

Louise Uttinger, Esq.
Assistant Staff Counsel
Regulatory Operations Staff
Public Utilities Commission of Nevada
1150 E. William St.
Carson City, NV 89701

Mark Harris, P.E.
Resource Planning Engineer
Regulatory Operations Staff
Public Utilities Commission of Nevada
1150 E. William St.
Carson City, NV 89701

Eric Witkoski, Esq.
Chief Deputy Attorney General
Bureau of Consumer Advocate
100 N. Carson St.
Carson City, NV 89701

Nevada Office of the Attorney General
Bureau of Consumer Protection
555 E. Washington, Suite 3900
Las Vegas, NV 89101

Churchill County Clerk
155 N. Taylor St., Suite 110
Fallon, NV 89406

Nevada Department of Conservation and Natural Resources
901 S. Stewart St., Suite 5001
Carson City, NV 89701

Nevada Division of Environmental Protection
901 S. Stewart St., Suite 4001
Carson City, NV 89701

DATED this 16 day of June, 2011.

RECEIVED-PUBLIC
UTILITIES COMMISSION
OF NEVADA-CARSON CITY
2011 JUN 16 AM 9:22

BEFORE THE PUBLIC UTILITIES COMMISSION OF NEVADA

In the Matter of the Application of TGP Dixie Development Company, LLC, for a permit to construct the Coyote Canyon Geothermal Electric Generating project pursuant to the Nevada Utility Environmental Protection Act.	)	DOCKET NO. _____

EXHIBITS
TO
APPLICATION OF TGP DIXIE DEVELOPMENT COMPANY, LLC
FOR A PERMIT TO CONSTRUCT
THE COYOTE CANYON GEOTHERMAL ELECTRIC GENERATION PROJECT

LIST OF EXHIBITS

1. Map of Location
2. Map of TGP Coyote Canyon Proposed Action Location, Routing Maps, and Site Plan Drawings - p.1 and p.2 (a)(b)(c)(d)
3. H Frame Pole Structure - p. 1 and 2
4. BLM Leases
5. Affidavit of Publication
6. Proof of Service - State Clearinghouse
7. EA Exploration - April/2010
8. EA Utilization - November/2010
9. Special Use Permit
10. BLM Drilling Permits
11. List of Remaining Permits
12. Draft Notice

EXHIBIT 1

Map of Location

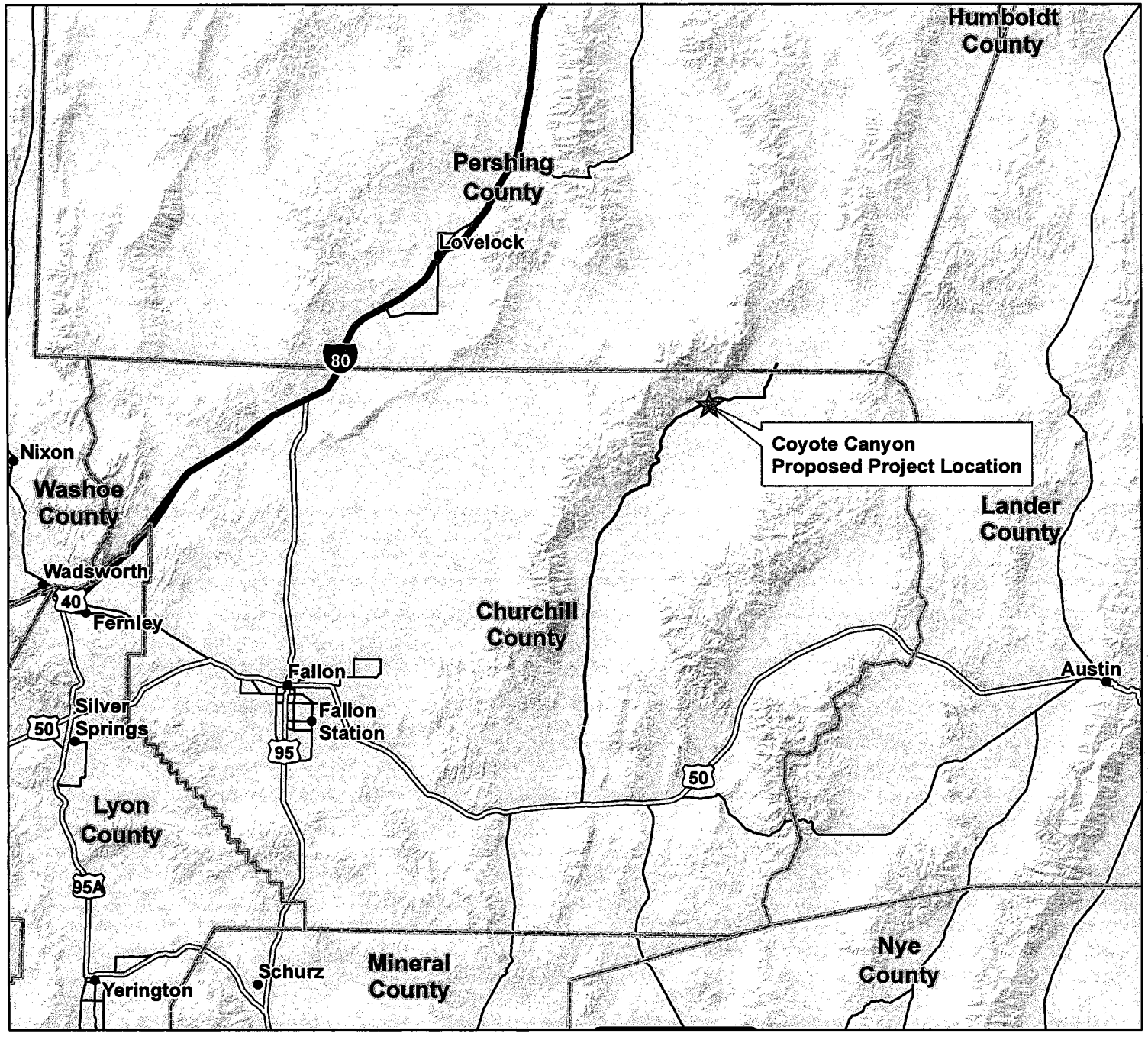

Figure 1-1:
Project Location
Coyote Canyon

- Cities
- County Boundaries
- Interstate Highway
- US Highways
- Local Road

N

0 5 10 15 20
Miles

1:1,000,000

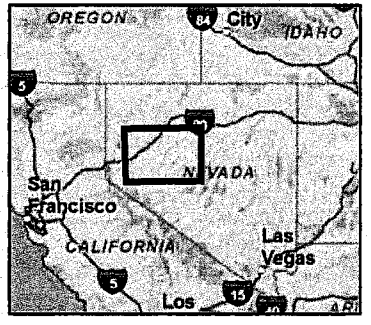

No warranty is made by the Bureau of Land Management as to the accuracy, reliability, or completeness of these data for individual use or aggregate use with other data.

NATIONAL SYSTEM OF PUBLIC LANDS

U.S. Department of the Interior
Bureau of Land Management
Carson City District
Stillwater Field Office
5665 Morgan Mill Road
Carson City, NV 89701

EXHIBIT 2

Map of TGP Coyote Canyon Proposed Action Location,
Routing Maps, and Site Plan Drawings
p.1 and p.2 (a)(b)(c)(d)

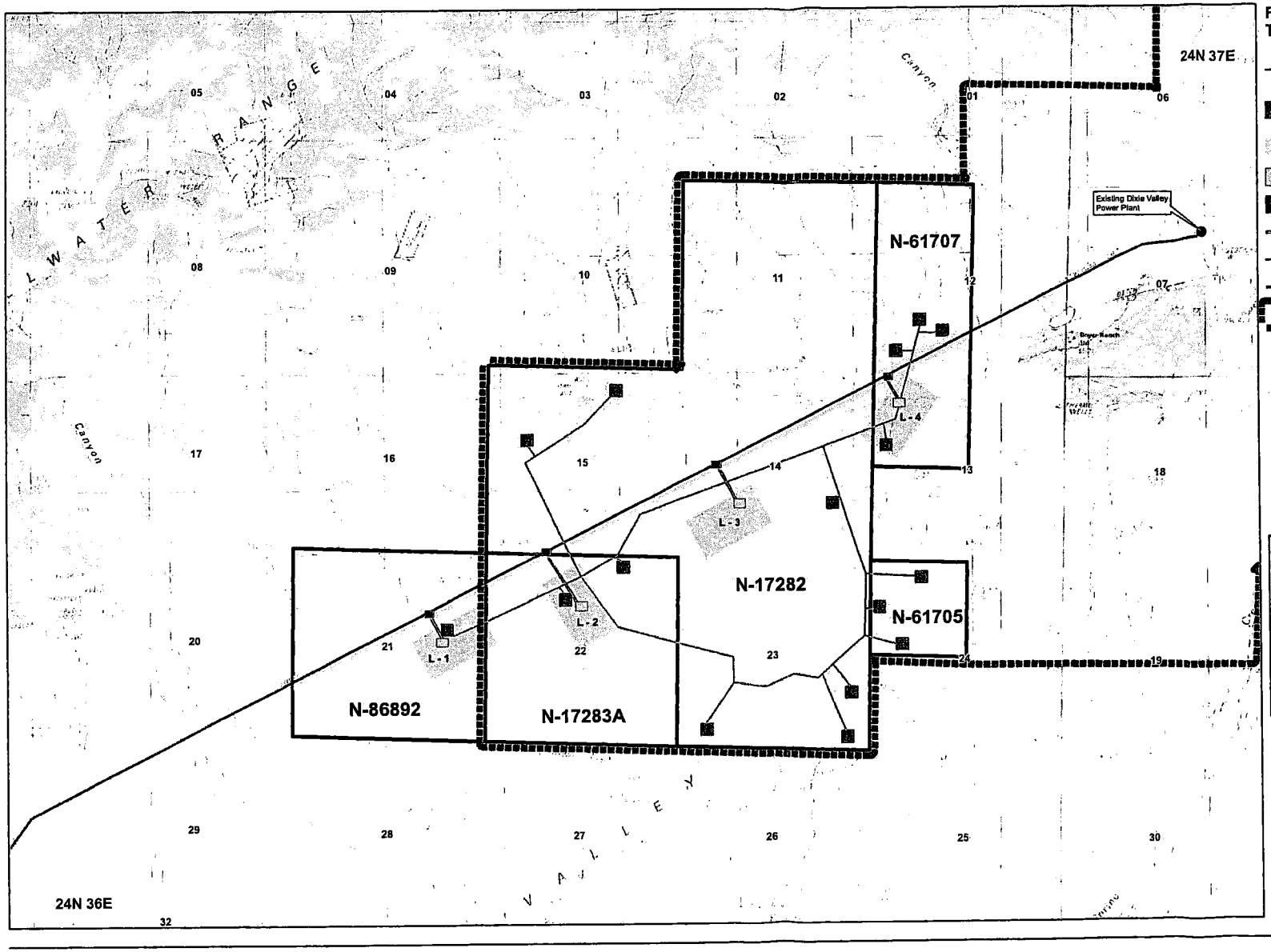

Figure 2-1
TGP Coyote Canyon Proposed Action

- Proposed Action Area
- Production / Injection Well Pads
- Potential Plant Site (with water well) (Only One Plant Will Be Constructed)
- Substations
- Ring Bus Collector Site
- Gen Tie
- Access Roads / Pipelines
- Existing TGP 230 kV Transmission Line
- Dixie Valley Unit
- Bureau of Land Management
- Private
- Navy

N

0 0.2 0.4 0.6 0.8 1
Miles
1:32,000

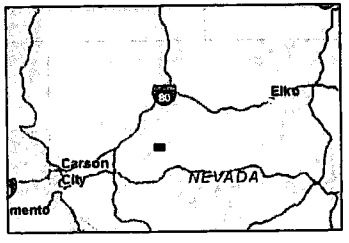

No warranty is made by the Bureau of Land Management as to the accuracy, reliability, or completeness of these data for individual use or aggregate use with other data.

NATIONAL SYSTEM OF PUBLIC LANDS

U.S. Department of the Interior
Bureau of Land Management
Carson City District
Stillwater Field Office
5665 Morgan Mill Road
Carson City, NV 89701

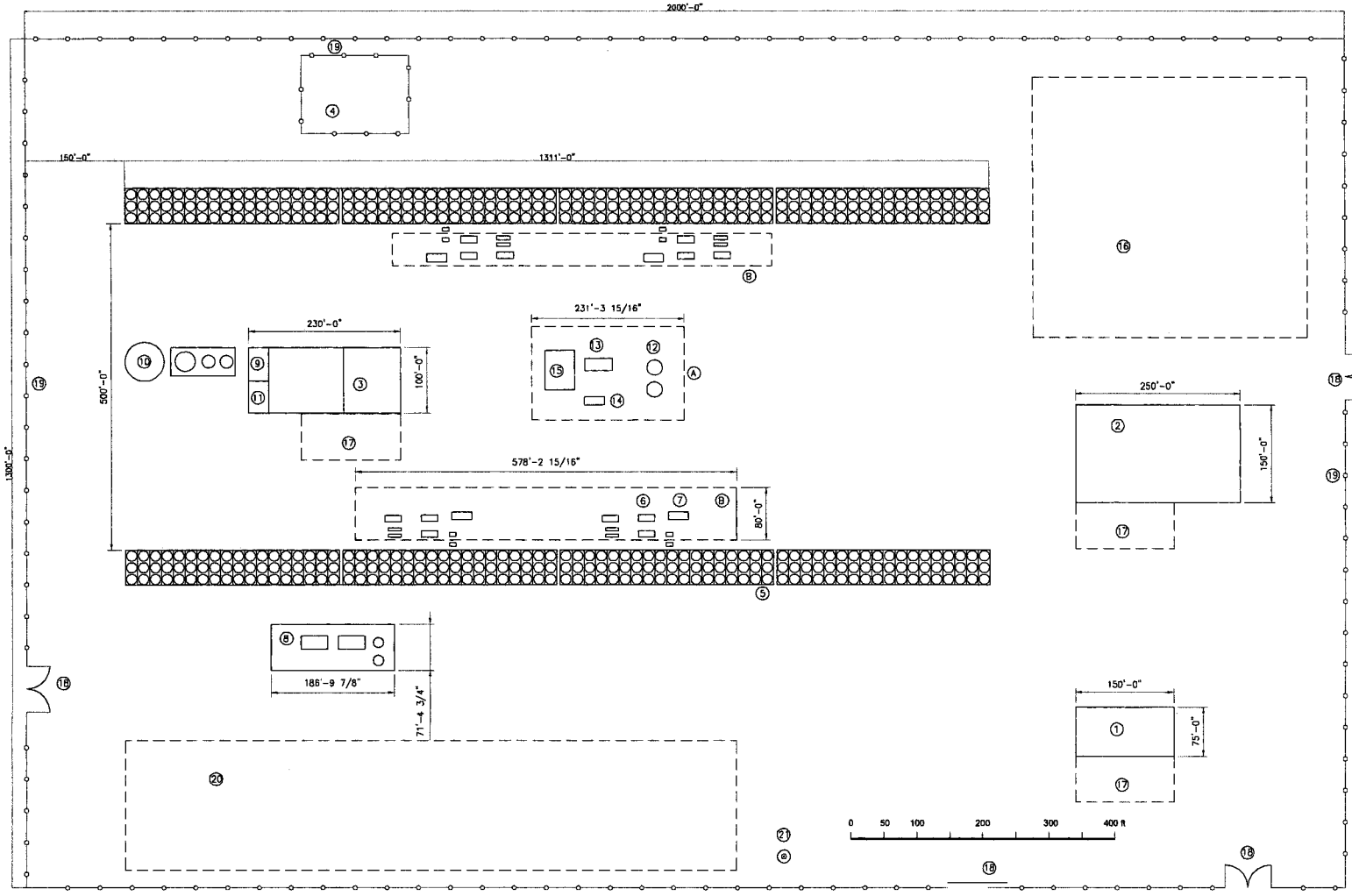

1. ADMINISTRATION BUILDING
2. WAREHOUSE
3. CONTROL BUILDING/MCC ROOM
4. SUBSTATION
5. AIR COOLED CONDENSERS
6. BINARY ORC EQUIPMENT
7. ORC ELECTRICAL ROOM
8. CHEMICAL STORAGE
9. AIR COMPRESSORS
10. FIRE / STORAGE WATER TANK
11. FIRE PUMPS / EMERGENCY GENERATOR
12. HP SEPERATOR/DEMISTER
13. STEAM TURBINE
14. STEAM TURBINE ELECTRICAL BUILDING
15. STEAM TURBINE CONDENSER/HEAT EXCHANGERS
16. LAYDOWN AREA (CONSTRUCTION AND PLANT USE)
17. PARKING
18. GATES
19. FENCE
20. SUMP
21. PLANT INJECTION WELL

A. STEAM TURBINE EQUIPMENT REQUIRED FOR FLASH OR COMBINED CYCLE

B. BINARY EQUIPMENT REQUIRED FOR BINARY OR COMBINED CYCLE

*COMBINED CYCLE REQUIRED BOTH STEAM AND BINARY EQUIPMENT

*ALL OTHER EQUIPMENT IS COMMON TO ALL TECHNOLOGIES

NO.	DATE	REVISION	BY	CHK	APP	NO.	DATE	REVISION	BY	CHK	APP	REFERENCE DRAWINGS	NUMBER	REFERENCE DRAWINGS	NUMBER

APPROVAL	DATE	SCALE: NTS	DATE
		DESIGNED BY BWK	6/10
		DRAWN BY BWK	6/10
		CHECKED BY	
		PROJECT ENGINEER	
		PROJECT MANAGER	

TERRA-GEN POWER
GEOTHERMAL PLANT - AIR COOLED
GENERAL ARRANGEMENT

Job No. CC | Dwg. No. 000-M-002 | REV A

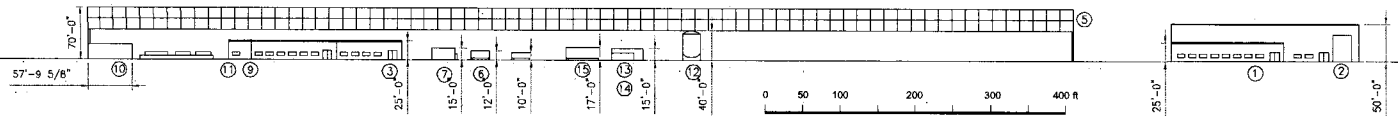

1. ADMINISTRATION BUILDING
2. WAREHOUSE
3. CONTROL BUILDING/MCC ROOM
5. AIR COOLED CONDENSERS
6. BINARY ORC EQUIPMENT
7. ORC ELECTRICAL ROOM
9. AIR COMPRESSORS
10. FIRE / STORAGE WATER TANK
11. FIRE PUMPS / EMERGENCY GENERATOR
12. HP SEPERATOR/DEMISTER
13. STEAM TURBINE
14. STEAM TURBINE ELECTRICAL BUILDING
15. STEAM TURBINE CONDENSER/HEAT EXCHANGERS

NO.	DATE	REVISION	BY	CHK	APP	NO.	DATE	REVISION	BY	CHK	APP	REFERENCE DRAWINGS	NUMBER	REFERENCE DRAWINGS	NUMBER

APPROVAL	DATE	SCALE: NTS		DATE
		DESIGNED BY	BWK	6/10
		DRAWN BY	BWK	6/10
		CHECKED BY		
		PROJECT ENGINEER		
		PROJECT MANAGER		

TERRA-GEN POWER
GEOTHERMAL PLANT - AIR COOLED
GENERAL PLAN VIEW

Job No. CC | Dwg. No. 000-M-003 | REV A

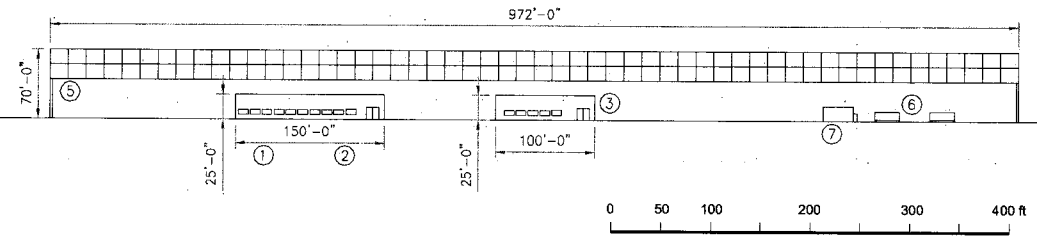

1. ADMINISTRATION BUILDING
2. WAREHOUSE
3. CONTROL BUILDING/MCC ROOM
5. AIR COOLED CONDENSERS
6. BINARY ORC EQUIPMENT
7. ORC ELECTRICAL ROOM

NO.	DATE	REVISION	BY	CHK	APP	NO.	DATE	REVISION	BY	CHK	APP

REFERENCE DRAWINGS	NUMBER	REFERENCE DRAWINGS	NUMBER

APPROVAL	DATE	SCALE: See Drawing	DATE
		DESIGNED BY	
		DRAWN BY	
		CHECKED BY	
		PROJECT ENGINEER	
		PROJECT MANAGER	

TERRA-GEN POWER
AIR COOLED BINARY PLANT
GENERAL PLAN VIEW

Job No. | Dwg. No. 100-M-002 | REV

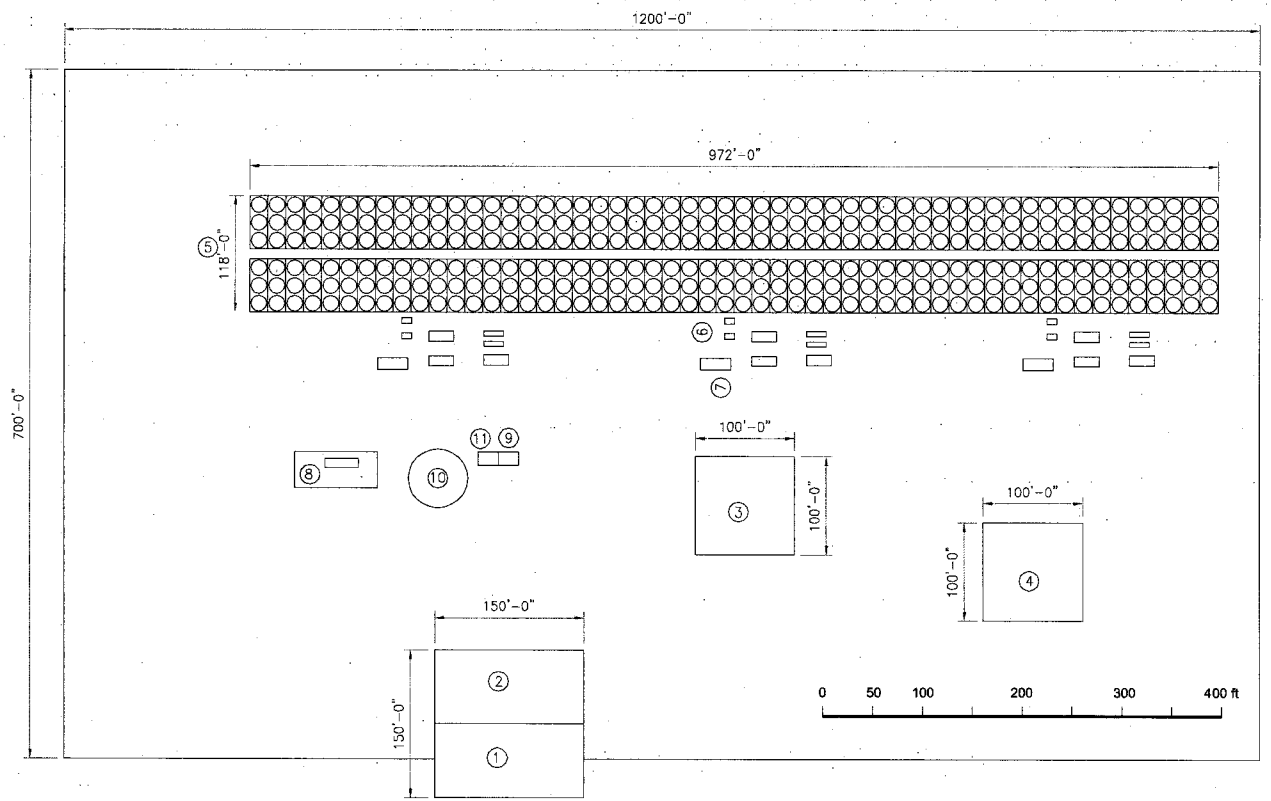

1. ADMINISTRATION BUILDING
2. WAREHOUSE
3. CONTROL BUILDING/MCC ROOM
4. SUBSTATION
5. AIR COOLED CONDENSERS
6. BINARY ORC EQUIPMENT
7. ORC ELECTRICAL ROOM
8. CHEMICAL STORAGE
9. AIR COMPRESSORS
10. FIRE / STORAGE WATER TANK
11. FIRE PUMPS / EMERGENCY GENERATOR

NO.	DATE	REVISION	BY	CHK	APP	NO.	DATE	REVISION	BY	CHK	APP

REFERENCE DRAWINGS	NUMBER	REFERENCE DRAWINGS	NUMBER

APPROVAL	DATE	SCALE: See Drawing	DATE
		DESIGNED BY	
		DRAWN BY	
		CHECKED BY	
		PROJECT ENGINEER	
		PROJECT MANAGER	

TERRA-GEN POWER
AIR COOLED BINARY PLANT
GENERAL ARRANGEMENT

Job No. | Dwg. No. 100-M-001 | REV

EXHIBIT 3

H Frame Pole Structure
p. 1 and 2

Figure 2-9:
Typical H-Frame Pole Structure
Coyote Canyon

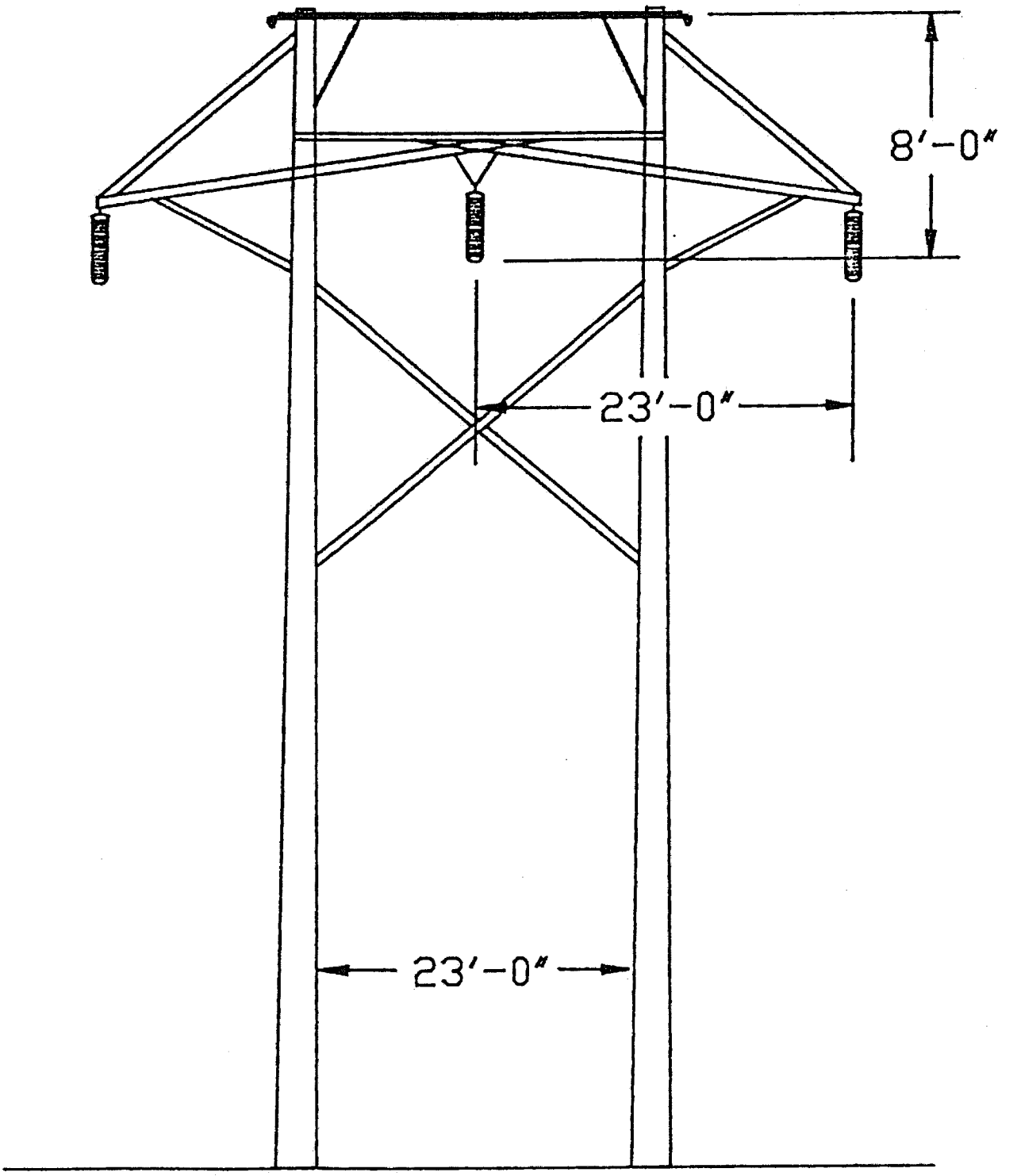

No warranty is made by the Bureau of Land Management as to the accuracy, reliability, or completeness of these data for individual use or aggregate use with other data.

Figure 2-10:
Typical 3-Pole Structure
Coyote Canyon

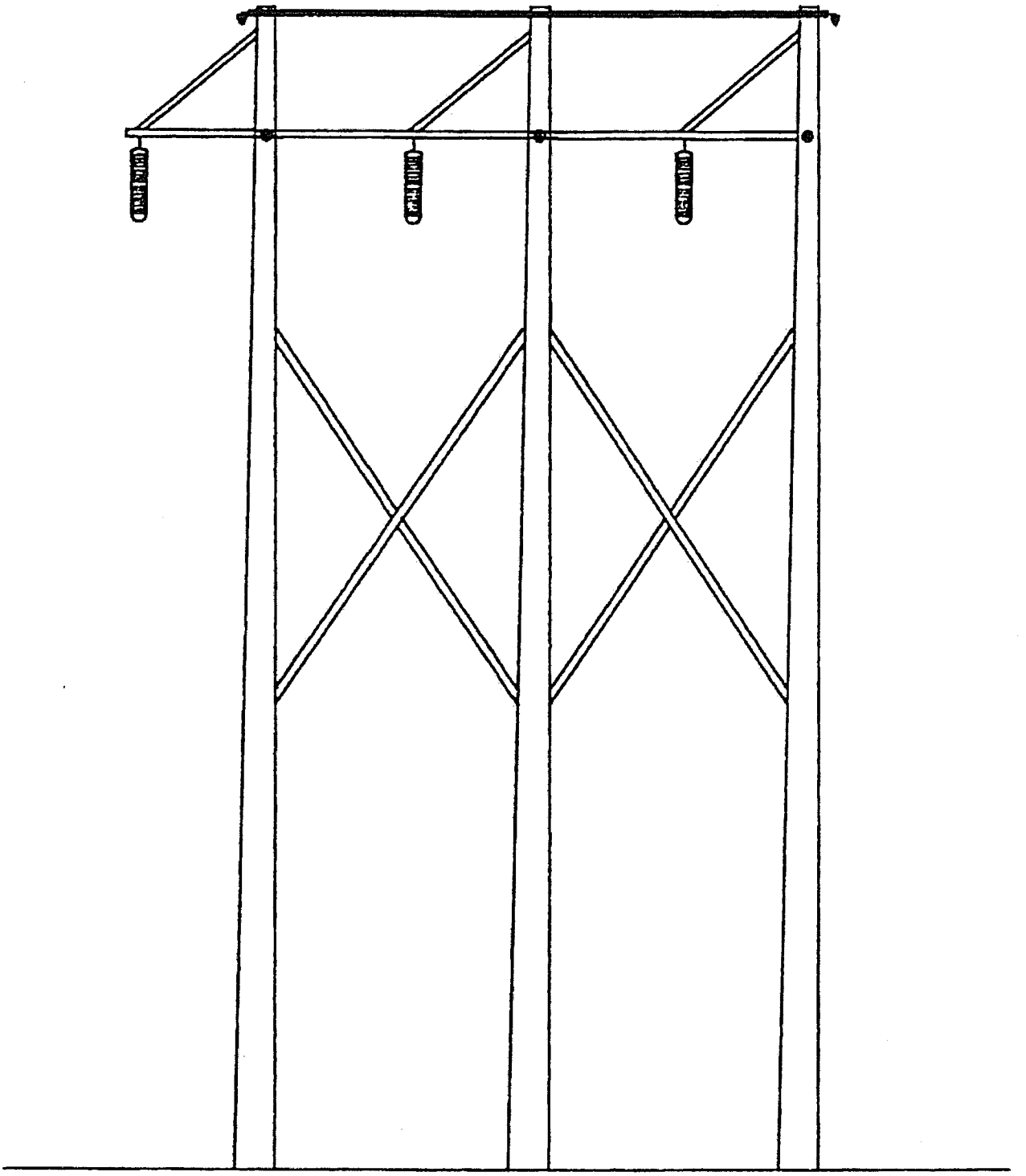

No warranty is made by the Bureau of Land Management as to the accuracy, reliability, or completeness of these data for individual use or aggregate use with other data.

EXHIBIT 4

BLM Leases

Form 3000-3
(January 2010)

UNITED STATES
DEPARTMENT OF THE INTERIOR
BUREAU OF LAND MANAGEMENT

ASSIGNMENT OF RECORD TITLE INTEREST IN A LEASE FOR OIL AND GAS OR GEOTHERMAL RESOURCES

Mineral Leasing Act of 1920 (30 U.S.C. 181 et seq.)
Act for Acquired Lands of 1947 (30 U.S.C 351 - 359)
Geothermal Steam Act of 1970 (30 U.S.C. 1001 - 1025)
Department of the Interior Appropriations Act, Fiscal Year 1981 (42 U.S.C. 6508)

FORM APPROVED
OMB NO. 1004-0034
Expires: July 31, 2012

Lease Serial No.
N-86892

Lease Effective Date
(Anniversary Date)
09/01/2009

New Serial No.

Type or print plainly in ink and sign in ink.

PART A: ASSIGNMENT

1. Assignee* TGP Coyote Canyon, LLC
Street 9590 Prototype Court, Suite 200
City, State, Zip Code Reno, NV 89521-5916

1a. Assignor TGP Development Company, LLC

*If more than one assignee, check here ☐ and list the name(s) and address(es) of all addtional assignees on page 2 of this form or on a separate attached sheet of paper.

This record title assignment is for: *(Check one)* ☐ Oil and Gas Lease, or ☑ Geothermal Lease

Interest conveyed: *(Check one or both, as appropriate)* ☑ Record Title, ☐ Overriding Royalty, payment out of production or other similar interests or payments

2. This assignment conveys the following interest:

Land Description	Percent of Interest			Percent of Overriding Royalty Similar Interests	
Additional space on page 2, if needed. Do not submit documents or agreements other than this form; such documents or agreements shall only be referenced herein.	Owned	Conveyed	Retained	Reserved	Previously reserved or conveyed
a	b	c	d	e	f
T24N-R36E, M.D.M. Sec 21: All	100%	100%	0		

RECEIVED
NOV 17 2010
BLM NVSO IAC

FOR BLM USE ONLY - DO NOT WRITE BELOW THIS LINE

UNITED STATES OF AMERICA

This assignment is approved solely for administrative purposes. Approval does not warrant that either party to this assignment holds legal or equitable title to this lease.

☑ Assignment approved for above described lands;

☐ Assignment approved for attached land description

Assignment approved effective JAN 01 2011

☐ Assignment approved for land description indicated on reverse of this form

By ATANDA CLARK
Bureau of Land Management (BLM)

Chief, Branch of Minerals Adjudication
(Title)

DEC 16 2010
(Date)

(Continued on page 2)

Part A (Continued): ADDITIONAL SPACE for names and addresses of additional assignees in Item No. 1, if needed, or for Land Description in Item No. 2, if needed.

RECEIVED
NOV 17 2010
BLM NVSO IAC

PART B - CERTIFICATION AND REQUEST FOR APPROVAL

1. The Assignor certifies as owner if an interest in the above designated lease that he/she hereby assigns to the above assignee(s) the rights specified above.

2. Assignee certifies as follows: (a) Assignee is a citizen of the United States; an association of such citizens; a municipality; or a corporation organized under the laws of the United States or of any State or territory thereof. For the assignment of NPR-A leases, assignee is a citizen, national, or resident alien of the United States or association of such citizens, nationals, resident aliens or private, public or municipal corporations, (b) Assignee is not considered a minor under the laws of the State in which the lands covered by this assignment are located; (c) Assignee's chargeable interests, direct and indirect, in each public domain and acquired lands separately in the same State, do not exceed 246,080 acres in oil and gas leases (of which up to 200,000 acres may be in oil and gas options), or 300,000 acres in leases in each leasing District in Alaska of which up to 200,000 acres may be in options, if this is an oil and gas lease issued in accordance with the Mineral Leasing Act of 1920, or 51,200 acres in any one State if this is a geothermal lease; (d) All parties holding an interest in the assignment are otherwise in compliance with the regulations (43 CFR Group 3100 or 3200) and the authorizing Acts; (e) Assignee is in compliance with reclamation requirements for all Federal oil and gas lease holdings as required by sec. 17(g) of the Mineral Leasing Act; and (f) Assignee is not in violation of sec. 41 of the Mineral Leasing Act.

3. Assignee's signature to this assignment constitutes acceptance of all applicable terms, conditions, stipulations and restrictions pertaining to the lease described herein.

For geothermal assignments, an overriding royalty may not be less than one-fourth (1/4) of one percent of the value of output, nor greater than 50 percent of the rate of royalty due to the United States when this assignment is added to all previously created overriding royalties (43 CFR 3241).

I certify that the statements made herein by me are true, complete, and correct to the best of my knowledge and belief and are made in good faith.

Executed this 10th day of November 20 10

Executed this 10th day of November 20 10

Name of Assignor as shown on current lease: TGP Development Company, LLC
(Please type or print)

Assignor (Signature)
or
Attorney-in-fact Vincent Simonetti (Signature) Vice President

Assignee B. Rae (Signature)
or
Attorney-in-fact Bernard Raemy (Signature) Vice President

9590 Prototype Court, Suite 200
(Assignor's Address)

Reno (City) NV (State) 89521-5916 (Zip Code)

Title 18 U.S.C. Sec.1001 makes it a crime for any person knowingly and willfully to make to any Department or agency of the United States any false, fictitious, or fraudulent statements or representations as to any matter within its jurisdiction.

(Continued on page 3)

Form 3200-24a
(September 2008)

UNITED STATES
DEPARTMENT OF THE INTERIOR
BUREAU OF LAND MANAGEMENT

OFFER TO LEASE AND LEASE FOR GEOTHERMAL RESOURCES
(For New Leases Issued Under the Energy Policy Act of 2005 [August 5, 2005])

Serial No.
NVN86892

The undersigned (see page 2) offers to lease all or any of the lands in item 2 that are avail
Steam Act of 1970, as amended (30 U.S.C. 1001-1025).

Future rental payments must be made on or before the anniversary date to:
Minerals Management Service
Royalty Management Program
P.O. Box 5640
Denver, CO 80217

READ INSTRUCTIONS BEFORE COMPLETING

1. Name	1a. Street	
TGP DEVELOPMENT COMPANY LLC	9590 PROTOPYPE CT STE 200	
1b. City	1c. State	1d. Zip Code
RENO	NV	89521

2. Surface managing agency if other than BLM: _____ Unit/Project: _____

Legal description of land requested (segregate by public domain and acquired lands): Enter T., R., Meridian, State and County

Total Acres Applied for _____

Percent U.S. interest _____

Amount remitted: Processing Fee $ _____ Rental Fee $ _____ Total $ _____

DO NOT WRITE BELOW THIS LINE

3. Land included in lease: Enter T., R., Meridian, State and County

T.0240N, R.0360E, 21 MDM, NV
Sec. 021 ALL;
Churchill County

Total Acres in Lease 640.00

Rental Retained $ 1280.00

In accordance with the above offer, or the previously submitted competitive bid, this lease is issued granting the exclusive right to drill for, extract, produce, remove, utilize, sell, and dispose of all the geothermal resources in the lands described in Item 3 together with the right to build and maintain necessary improvements thereupon, for a primary term of 10 years and subsequent extensions thereof in accordance with 43 CFR subpart 3207. Rights granted are subject to: applicable laws; the terms, conditions, and attached stipulations of this lease; the Secretary of the Interior's regulations and formal orders in effect as of lease issuance; and, when not inconsistent with the provisions of this lease, regulations and formal orders hereafter promulgated.

Type of Lease:

- [x] Competitive
- [ ] Noncompetitive
- [ ] Noncompetitive direct use (43 CFR subpart 3205)

Comments:

THE UNITED STATES OF AMERICA

BY _____ (Signing Official)

ATANDA CLARK (Printed Name)

Chief, Branch of Minerals Adjudication (Title) AUG 07 2009 (Date)

EFFECTIVE DATE OF LEASE SEP - 1 2009

Check if this is a converted lease [ ]

EFFECTIVE DATE OF LEASE CONVERSION _____

(Continued on page 2)

4. (a) The undersigned certifies that:
(1) The offeror is a citizen of the United States; an association of such citizens; a municipality; or a corporation organized under the laws of the United States, any State or the District of Columbia; (2) All parties holding an interest in the offer are in compliance with 43 CFR part 3200 and the authorizing Act; (3) The offeror's chargeable interests, direct and indirect, do not exceed those allowed under the Act; and (4) The offeror is not considered a minor under the laws of the State in which the lands covered by this offer are located.
(b) The undersigned agrees that signing this offer constitutes acceptance of this lease, including all terms, conditions and stipulations of which the offeror has been given notice. The offeror further agrees that this offer cannot be withdrawn, either in whole or part, unless the withdrawal is received by the proper BLM State Office before this lease, an amendment to this lease, or a separate lease, whichever covers the land described in the withdrawal, has been signed on behalf of the United States.

This offer will be rejected and will afford the offeror no priority if it is not properly completed and executed in accordance with the regulations or if it is not accompanied by the required payments. Title 18 U.S.C. § 1001 makes it a crime for any person knowingly and willfully to make to any Department or agency of the United States any false, fictitious, or fraudulent statements or representations as to any matter within its jurisdiction.

Duly executed this _____ day of _____, 20____

(Printed Name of Lessee or Attorney-in-fact) (Signature of Lessee or Attorney-in-fact)

LEASE TERMS

Sec. 1. Rentals--Rentals must be paid to the proper office of the lessor in advance of each lease year. Annual rental rates per acre or fraction thereof, as applicable, are:
(a) Noncompetitive lease (includes post-sale parcels not receiving bids, a direct use lease or a lease issued to a mining claimant): $1.00 for the first 10 years; thereafter $5.00; or
(b) Competitive lease: $2.00 for the first year; $3.00 for the second through tenth year; thereafter $5.00.
Annual rental is always due by the anniversary date of this lease (43 CFR 3211.13), regardless of whether the lease is in a unit or outside of a unit, the lease is in production or not, or royalties or direct use fees apply to the production.
Rental may only be credited toward royalty under 43 CFR 3211.15 and 30 CFR 218.303. Rental may not be credited against direct use fees. Failure to pay annual rental timely will result in late fees and will make the lease subject to termination in accordance with 43 CFR 3213.14.

Sec. 2. (a) Royalties—Royalties must be paid to the proper office of the lessor. Royalties are due on the last day of the month following the month of production. Royalties will be computed in accordance with applicable regulations and orders. Royalty rates for geothermal resources produced for the commercial generation of electricity but not sold in an arm's length transaction are: 1.75 percent for the first 10 years of production and 3.5 percent after the first 10 years. The royalty rate is to be applied to the gross proceeds derived from the sale of electricity in accordance with 30 CFR part 206 subpart H.
The royalty rate for byproducts derived from geothermal resource production that are minerals specified in section 1 of the Mineral Leasing Act (MLA), as amended (30 U.S.C. 181), is 5 percent, except for sodium compounds, produced between September 29, 2006 and September 29, 2011 (Pub. L. No. 109-338, §102; note to 30 U.S.C. 362) for which the royalty rate is 2 percent. No royalty is due on byproducts that are not specified in 30 U.S.C. § 181. (43 CFR 3211.19.)
If this lease or a portion thereof is committed to an approved communitization or unit agreement and the agreement contains a provision for allocation of production, royalties must be paid on the production allocated to this lease.
(b) Arm's length transactions—The royalty rate for geothermal resources sold by you or your affiliate at arm's length to a purchaser is 10 percent of the gross proceeds derived from the arm's-length sale (43 CFR 3211.17, 3211.18).
(c) Advanced royalties—In the absence of a suspension, if you cease production for more than one calendar month on a lease that is subject to royalties and that has achieved commercial production, your lease will remain in effect only if you make advanced royalty payments in accordance with 43 CFR 3212.15(a) and 30 CFR 218.305.
(d) Direct use fees—Direct use fees must be paid in lieu of royalties for geothermal resources that are utilized for commercial, residential, agricultural, or other energy needs other than the commercial production or generation of electricity, but not sold in an arm's length transaction (43 CFR 3211.18; 30 CFR 206.356).
This requirement applies to any direct use of federal geothermal resources (unless the resource is exempted as described in 30 CFR 202.351(b) or the lessee is covered by paragraph (e), below) and is not limited to direct use leases. Direct use fees are due on the last day of the month following the month of production.
(e) If the lessee is a State, tribal, or local government covered by 43 CFR 3211.18(a)(3) and 30 CFR 206.366, check here: ☐. A lessee under this paragraph is not subject to paragraph (d), above. In lieu of royalties, the lessee under this paragraph must pay a nominal fee of
$ _____

Sec. 3. Bonds—A bond must be filed and maintained for lease operations as required by applicable regulations.

Sec. 4. Work requirements, rate of development, unitization, and drainage--Lessee must perform work requirements in accordance with applicable regulations (43 CFR 3207.11, 3207.12), and must prevent unnecessary damage to, loss of, or waste of leased resources. Lessor reserves the right to specify rates of development and production and to require lessee to commit to a communitization or unit agreement, within 30 days of notice, if in the public interest. Lessee must drill and produce wells necessary to protect leased lands from drainage or pay compensatory royalty for drainage in the amount determined by lessor. Lessor will exempt lessee from work requirements only where the lease overlies a mining claim that has an approved plan of operations and where BLM determines that the development of the geothermal resource on the lease would interfere with the mining operation (43 CFR 3207.13).

Sec. 5. Documents, evidence, and inspection—Lessee must file with the proper office of the lessor, not later than (30) days after the effective date thereof, any contract or evidence of other arrangement for the sale, use, or disposal of geothermal resources, byproducts produced, or for the sale of electricity generated using geothermal resources produced from the lease. At such times and in such form as lessor may prescribe, lessee must furnish detailed statements and all documents showing (a) amounts and quality of all geothermal resources produced and used (either for commercial production or generation of electricity, or in a direct use operation) or sold; (b) proceeds derived therefrom or from the sale of electricity generated using such resources; (c) amounts that are unavoidably lost or reinjected before use, used to generate plant parasitic electricity (as defined in 30 CFR 206.351) or electricity for lease operations, or otherwise used for lease operations related to the commercial production or generation of electricity; and (d) amounts and quality of all byproducts produced and proceeds derived from the sale or disposition thereof. Lessee may be required to provide plats and schematic diagrams showing development work and improvements, and reports with respect to parties in interest.
In a format and manner approved by lessor, lessee must: keep a daily drilling record, a log, and complete information on well surveys and tests; keep a record of subsurface investigations; and furnish copies to lessor when required.
Lessee must keep open at all reasonable times for inspection by any authorized officer of lessor, the leased premises and all wells, improvements, machinery, and fixtures thereon, and all books, accounts, maps, and records relative to operations, surveys, or investigations on or in the leased lands. Lessee must maintain copies of all contracts, sales agreements, accounting records, billing records, invoices, gross proceeds and payment data regarding the sale, disposition, or use of geothermal resources, byproducts produced, and the sale of electricity generated using resources produced from the lease, and all other information relevant to determining royalties or direct use fees. All such records must be maintained in lessee's accounting offices for future audit by lessor and produced upon request by lessor or lessor's authorized representative or agent. Lessee must maintain required records for 6 years after they are generated or, if an audit or investigation is underway, until released of the obligation to maintain such records by lessor.

Sec. 6. Conduct of operations—Lessee must conduct operations in a manner that minimizes adverse impacts to the land, air, and water, to cultural, biological, visual, and other resources, and to other land uses or users. Lessee must take reasonable measures deemed necessary by lessor to accomplish the intent of this section. To the extent consistent with leased rights granted, such measures may include, but are not limited to, modification to siting or design of facilities, timing of operations, and specification of interim and final reclamation measures. Lessor reserves the right to continue existing uses and to authorize future uses upon or in the leased lands, including the approval of easements or rights-of-way. Such uses will be conditioned so as to prevent unnecessary or unreasonable interference with rights of lessee. Prior to disturbing the surface of the leased lands, lessee must contact lessor to be apprised of procedures to be followed and modifications or reclamation measures that may be necessary. Areas to be disturbed may require inventories or special studies to determine the extent of impacts to other resources. Lessor may require lessee to complete minor inventories or short term special studies under guidelines provided by lessor. If, in the conduct of operations, threatened or endangered species, objects of historic or scientific interest, or substantial unanticipated environmental effects are observed, lessee must immediately contact lessor. Lessee must cease any operations that are likely to affect or take such species, or result in the modification, damage or destruction of such habitats or objects.

Sec. 7. Production of byproducts—If the production, use, or conversion of geothermal resources from these leased lands is susceptible of producing a valuable byproduct or byproducts, including commercially demineralized water for beneficial uses in accordance with applicable State water laws, lessor may require substantial beneficial production or use thereof by lessee.

Sec. 8. Damages to property—Lessee must pay lessor for damage to lessor's improvements, and must save and hold lessor harmless from all claims for damage or harm to persons or property as a result of lease operations.

Sec. 9. Protection of diverse interests and equal opportunity—Lessee must maintain a safe working environment in accordance with applicable regulations and standard industry practices, and take measures necessary to protect public health and safety. Lessor reserves the right to ensure that production is sold at reasonable prices and to prevent monopoly. Lessee must comply with Executive Order No. 11246 of September 24, 1965, as amended, and regulations and relevant orders of the Secretary of Labor issued pursuant thereto. Neither lessee nor lessee's subcontractor may maintain segregated facilities.

Sec. 10. Transfer of lease interests and relinquishment of lease—As required by regulations, lessee must file with lessor any assignment or other transfer of an interest in this lease. Subject to the requirements of 43 CFR subpart 3213, lessee may relinquish this lease or any legal subdivision by filing in the proper office a written relinquishment, which will be effective as of the date BLM receives it, subject to the continued obligation of the lessee and surety to be responsible for: paying all accrued rentals and royalties; plugging and abandoning all wells on the relinquished land; restoring and reclaiming the surface and other resources; and complying with 43 CFR 3200.4.

Sec. 11. Delivery of premises—At such time as all or portions of this lease are returned to lessor, lessee must place all wells in condition for suspension or abandonment, reclaim the land as specified by lessor, and within a reasonable period of time, remove equipment and improvements not deemed necessary by lessor for preservation of producible wells or continued protection of the environment.

Sec. 12. Proceedings in case of default—If lessee fails to comply with any provisions of this lease or other applicable requirements under 43 CFR 3200.4, and the noncompliance continues for 30 days after written notice thereof, this lease will be subject to termination in accordance with the Act and 43 CFR 3213. This provision will not be construed to prevent the exercise by lessor of any other legal and equitable remedy or action, including waiver of the default. Any such remedy, waiver, or action will not prevent later termination for the same default occurring at any other time. Whenever the lessee fails to comply in a timely manner with any of the provisions of the Act, this lease, the regulations, or other applicable requirements under 43 CFR 3200.4, and immediate action is required, the lessor may enter on the leased lands and take measures deemed necessary to correct the failure at the lessee's expense.

Sec. 13. Heirs and successors-in-interest—Each obligation of this lease will extend to and be binding upon, and every benefit hereof will inure to, the heirs, executors, administrators, successors, or assigns of the respective parties hereto.

(Continued on page 3)

INSTRUCTIONS

A. General

1. Items 1 and 2 need to be completed only by parties filing for a noncompetitive lease. The BLM will complete the front of the form for other types of leases. The BLM may use the "Comments" space under Item 3 to identify when: the lessee has elected to make all lease terms subject to the Energy Policy Act of 2005 under 43 CFR 3200.7(a)(2) or 43 CFR 3200.8(b) (box labeled "converted lease" must also be checked); the lease is being issued noncompetitively to a party who holds a mining claim on the same lands as is covered by the lease under 43 CFR 3204.12; the lease is a direct use lease issued to a State, local, or tribal government (box at section 2(e) under Lease Terms must also be checked); the lease is a competitive lease with direct-use-only stipulations attached; or other special circumstances exist. A lessee who seeks to convert only the royalty rate of a lease under 43 CFR 3212.25 or who qualifies for a case-by-case royalty rate determination under 43 CFR 3211.17(b)(1)(i) should not use this form, but should instead use an addendum to the existing lease.

2. Entries must be typed or printed plainly in ink. The offeror must sign the form (Item 4) in ink.

3. An original and two copies of this offer must be prepared and filed in the proper BLM State Office. See regulations at 43 CFR 1821.10 for office locations.

4. If more space is needed, additional sheets must be attached to each copy of the form submitted.

B. Specific

Item 1—Enter the offeror's name and billing address.

Item 2—Indicate the agency managing the surface use of the land and the name of the unit or project of which the land is a part. The offeror may also provide other information that will assist in establishing status of the lands. The description of land must conform to 43 CFR 3203.10. Total acres applied for must not exceed that allowed by regulations (43 CFR 3203.10; 43 CFR 3206.12).

Payments: For noncompetitive leases, the amount remitted must include the processing fee for noncompetitive lease applications (43 CFR 3204.10; 43 CFR 3000.12) and the first year's rental at the rate of $1 per acre or fraction thereof. If the United States owns only a fractional interest in the geothermal resources, you must pay a prorated rental under 43 CFR 3211.11(d). The BLM will retain the processing fee even if the offer is completely rejected or withdrawn. To maintain the offeror's priority, the offeror must submit rental sufficient to cover all the land requested. If the land requested includes lots or irregular quarter-quarter sections, the exact acreage of which is not known to the offeror, rental should be submitted on the assumption that each such lot or quarter-quarter section contains 40 acres. If the offer is withdrawn or rejected in whole or in part before a lease issues, the BLM will return the rental remitted for the parts withdrawn or rejected.

The BLM will fill in the processing fee for competitive lease applications (43 CFR 3203.17; 43 CFR 3000.12) and the first year's rental at the rate of $2 per acre or fraction thereof.

Item 3—The BLM will complete this space.

NOTICES

The Privacy Act of 1974 and the regulation at 43 CFR 2.48(d) provide that you be furnished with the following information in connection with information required by this geothermal lease application.
AUTHORITY: 30 U.S.C. 1000 et seq.
PRINCIPAL PURPOSE—The information is to be used to process geothermal lease applications.
ROUTINE USES: (1) The adjudication of the lessee's rights to the land or resources. (2) Documentation for public information in support of notations made on land status records for the management, disposal, and use of public lands and resources. (3) Transfer to appropriate Federal agencies when concurrence is required prior to granting uses or rights in public lands or resources. (4) Transfer to the appropriate Federal, State, local, or foreign agencies, when relevant to civil, criminal, or regulatory investigations or prosecutions.

RIPARIAN AREAS STIPULATION

The lessee shall comply with the following special conditions and stipulations unless they are modified by mutual agreement of the Lessee and the Authorized Officer (AO):

No surface occupancy or disturbance will be allowed within 650 feet (horizontal measurement) of any surface water bodies, riparian areas, wetlands, playas, or 100-year floodplains to protect the integrity of these resources (as delineated by the presence of riparian vegetation and not actual water). Exceptions to this restriction may be considered on a case-by-case basis if the BLM determines at least one of the following conditions apply: 1) additional development is proposed in an area where current development has shown no adverse impacts, 2) suitable off-site mitigation will be provided if habitat loss is expected, or 3) BLM determines development proposed under any plan of operations ensures adequate protection of the resources.

	Description of Lands
PARCEL NV-09-07-007 THRU PARCEL NV-09-07-008	ALL LANDS
PARCEL NV-09-07-015 THRU PARCEL NV-09-07-017	ALL LANDS
PARCEL NV-09-07-020	ALL LANDS
PARCEL NV-09-07-025	
PARCEL NV-09-07-027 THRU PARCEL NV-09-07-028	ALL LANDS
PARCEL NV-09-07-032 THRU PARCEL NV-09-07-033	ALL LANDS
PARCEL NV-09-07-040 THRU PARCEL NV-09-07-051	ALL LANDS
PARCEL NV-09-07-055 THRU PARCEL NV-09-07-057	ALL LANDS
PARCEL NV-09-07-060 THRU PARCEL NV-09-07-067	ALL LANDS
PARCEL NV-09-07-074	ALL LANDS

NATIVE AMERICAN CONSULTATION STIPULATION

The lessee shall comply with the following special conditions and stipulations unless they are modified by mutual agreement of the Lessee and the Authorized Officer (AO):

All development activities proposed under the authority of this lease are subject to the requirement for Native American consultation prior to BLM authorizing the activity. Depending on the nature of the lease developments being proposed and the resources of concerns to tribes potentially effected, Native American consultation and resulting mitigation measures to avoid significant impacts may extend time frames for processing authorizations for development activities, as well as, change in the ways in which developments are implemented.

	Description of Lands
PARCEL NV-09-07-007 THRU PARCEL NV-09-07-008	ALL LANDS
PARCEL NV-09-07-015 THRU PARCEL NV-09-07-017	ALL LANDS
PARCEL NV-09-07-020	ALL LANDS
PARCEL NV-09-07-025 THRU PARCEL NV-09-07-028	ALL LANDS
PARCEL NV-09-07-032 THRU PARCEL NV-09-07-033	ALL LANDS
PARCEL NV-09-07-040 THRU PARCEL NV-09-07-051	ALL LANDS
PARCEL NV-09-07-055 THRU PARCEL NV-09-07-057	ALL LANDS
PARCEL NV-09-07-060 THRU PARCEL NV-09-07-067	ALL LANDS
PARCEL NV-09-07-074	ALL LANDS
PARCEL NV-09-07-079	ALL LANDS

ENDANGERED SPECIES ACT
SECTION 7 CONSULTATION STIPULATION

The lease area may now or hereafter contain plants, animals, or their habitats determined to be threatened, endangered, or other special status species. BLM may recommend modifications to exploration and development proposals to further its conservation and management objective to avoid BLM-approved activity that will contribute to a need to list such a species or their habitat. BLM may require modifications to or disapprove proposed activity that is likely to result in jeopardy to the continued existence of a proposed or listed threatened or endangered species or result in the destruction or adverse modifications of a designated or proposed critical habitat. BLM will not approve any ground-disturbing activity that may affect any such species or critical habitat until it completes its obligations under applicable requirements of the Endangered Species Act, 16 USC § 1531 *et seq.*, as amended, including completion of any required procedure for conference or consultation.

CULTURAL RESOURCE PROTECTION
LEASE STIPULATION

This lease may be found to contain historic properties or resources protected under the National Historic Preservation Act, American Indian Religious Freedom Act, Native American Graves Protection and Repatriation Act, EO 13007, or other statutes and executive orders. The BLM will not approve any ground-disturbing activities that may affect any such properties or resources until it completes its obligations under applicable requirements of the NHPA and other authorities. The BLM may require exploration or development proposals to be modified to protect such properties, or it may disapprove any activity that is likely to result in adverse effects that could not be successfully avoided, minimized, or mitigated.

Form 3000-3
(January 2010)

UNITED STATES
DEPARTMENT OF THE INTERIOR
BUREAU OF LAND MANAGEMENT

ASSIGNMENT OF RECORD TITLE INTEREST IN A LEASE FOR OIL AND GAS OR GEOTHERMAL RESOURCES

Mineral Leasing Act of 1920 (30 U.S.C. 181 et seq.)
Act for Acquired Lands of 1947 (30 U.S.C 351 - 359)
Geothermal Steam Act of 1970 (30 U.S.C. 1001 - 1025)
Department of the Interior Appropriations Act, Fiscal Year 1981 (42 U.S.C. 6508)

FORM APPROVED
OMB NO. 1004-0034
Expires: July 31, 2012

Lease Serial No.
N-61707

Lease Effective Date
(Anniversary Date) 4A
~~07/01/1996~~ 07/01/1996

New Serial No.

Type or print plainly in ink and sign in ink.

PART A: ASSIGNMENT

1. Assignee* TGP Coyote Canyon, LLC
Street 9590 Prototype Court, Suite 200
City, State, Zip Code Reno, NV 89521-5916

1a. Assignor Terra-Gen Dixie Valley, LLC

*If more than one assignee, check here ☐ and list the name(s) and address(es) of all addtional assignees on page 2 of this form or on a separate attached sheet of paper.

This record title assignment is for: *(Check one)* ☐ Oil and Gas Lease, or ☑ Geothermal Lease

Interest conveyed: *(Check one or both, as appropriate)* ☑ Record Title, ☐ Overriding Royalty, payment out of production or other similar interests or payments

2. This assignment conveys the following interest:

Land Description	Percent of Interest			Percent of Overriding Royalty Similar Interests	
Additional space on page 2, if needed. Do not submit documents or agreements other than this form; such documents or agreements shall only be referenced herein.	Owned	Conveyed	Retained	Reserved	Previously reserved or conveyed
a	b	c	d	e	f
T24N-R36E, M.D.M. Sec. 12: W2 Sec. 13: NW4	100%	100%	0		

RECEIVED
NOV 17 2010
BLM NVSO IAC

FOR BLM USE ONLY - DO NOT WRITE BELOW THIS LINE

UNITED STATES OF AMERICA

This assignment is approved solely for administrative purposes. Approval does not warrant that either party to this assignment holds legal or equitable title to this lease.

☑ Assignment approved for above described lands;

☐ Assignment approved for attached land description

Assignment approved effective JAN 01 2011

☐ Assignment approved for land description indicated on reverse of this form

By Elaine Guenaga
Bureau of Land Management (BLM)

Chief, Branch of Minerals Adjudication DEC 17 2010
(Title) (Date)

(Continued on page 2)

Part A (Continued): ADDITIONAL SPACE for names and addresses of additional assignees in Item No. 1, if needed, or for Land Description in Item No. 2, if needed.

RECEIVED
NOV 17 2010
BLM NVSO IAC

PART B - CERTIFICATION AND REQUEST FOR APPROVAL

1. The Assignor certifies as owner if an interest in the above designated lease that he/she hereby assigns to the above assignee(s) the rights specified above.

2. Assignee certifies as follows: (a) Assignee is a citizen of the United States; an association of such citizens; a municipality; or a corporation organized under the laws of the United States or of any State or territory thereof. For the assignment of NPR-A leases, assignee is a citizen, national, or resident alien of the United States or association of such citizens, nationals, resident aliens or private, public or municipal corporations, (b) Assignee is not considered a minor under the laws of the State in which the lands covered by this assignment are located; (c) Assignee's chargeable interests, direct and indirect, in each public domain and acquired lands separately in the same State, do not exceed 246,080 acres in oil and gas leases (of which up to 200,000 acres may be in oil and gas options), or 300,000 acres in leases in each leasing District in Alaska of which up to 200,000 acres may be in options, if this is an oil and gas lease issued in accordance with the Mineral Leasing Act of 1920, or 51,200 acres in any one State if this is a geothermal lease; (d) All parties holding an interest in the assignment are otherwise in compliance with the regulations (43 CFR Group 3100 or 3200) and the authorizing Acts; (e) Assignee is in compliance with reclamation requirements for all Federal oil and gas lease holdings as required by sec. 17(g) of the Mineral Leasing Act; and (f) Assignee is not in violation of sec. 41 of the Mineral Leasing Act.

3. Assignee's signature to this assignment constitutes acceptance of all applicable terms, conditions, stipulations and restrictions pertaining to the lease described herein.

For geothermal assignments, an overriding royalty may not be less than one-fourth (1/4) of one percent of the value of output, nor greater than 50 percent of the rate of royalty due to the United States when this assignment is added to all previously created overriding royalties (43 CFR 3241).

I certify that the statements made herein by me are true, complete, and correct to the best of my knowledge and belief and are made in good faith.

Executed this 10th day of November 20 10

Executed this 10th day of November 20 10

Name of Assignor as shown on current lease Terra-Gen Dixie Valley, LLC

(Please type or print)

Assignor (Signature)

or

Attorney-in-fact Vincent Sigmarotti (Signature) Vice President

9590 Prototype Court, Suite 200

(Assignor's Address)

Reno (City) NV (State) 89521-5916 (Zip Code)

Assignee (Signature)

or

Attorney-in-fact Bernard Raemy (Signature) Vice President

Title 18 U.S.C. Sec. 1001 makes it a crime for any person knowingly and willfully to make to any Department or agency of the United States any false, fictitious, or fraudulent statements or representations as to any matter within its jurisdiction.

(Continued on page 3)

Form 3200-24a
(September 2008)

UNITED STATES
DEPARTMENT OF THE INTERIOR
BUREAU OF LAND MANAGEMENT

OFFER TO LEASE AND LEASE FOR GEOTHERMAL RESOURCES
(For New Leases Issued Under the Energy Policy Act of 2005 [August 5, 2005])

Serial No.
N-61707

The undersigned (see page 2) offers to lease all or any of the lands in item 2 that are available for lease pursuant to the Geothermal Steam Act of 1970, as amended (30 U.S.C. 1001-1025).

READ INSTRUCTIONS BEFORE COMPLETING

1. Name	1a. Street	
Terra-Gen Dixie Valley LLC	9590 Prototype Court, Suite 200	
1b. City	1c. State	1d. Zip Code
Reno	NV	89521

2. Surface managing agency if other than BLM: _____ Unit/Project: _____

Legal description of land requested (segregate by public domain and acquired lands): Enter T., R., Meridian, State and County

REC'D - BLM - NSO
9:00 A.M. FEB 2 6 2010

Total Acres Applied for _____

Percent U.S. interest _____

Amount remitted: Processing Fee $ _____ Rental Fee $ _____ Total $ _____

DO NOT WRITE BELOW THIS LINE

3. Land included in lease: Enter T., R., Meridian, State and County

T. 24 N., R. 36 E., MDM NEVADA Churchill County
sec. 12, W2;
sec. 13, NW.

Total Acres in Lease 480.00

Rental Retained $ _____

In accordance with the above offer, or the previously submitted competitive bid, this lease is issued granting the exclusive right to drill for, extract, produce, remove, utilize, sell, and dispose of all the geothermal resources in the lands described in Item 3 together with the right to build and maintain necessary improvements thereupon, for a primary term of 10 years and subsequent extensions thereof in accordance with 43 CFR subpart 3207. Rights granted are subject to: applicable laws; the terms, conditions, and attached stipulations of this lease; the Secretary of the Interior's regulations and formal orders in effect as of lease issuance; and, when not inconsistent with the provisions of this lease, regulations and formal orders hereafter promulgated.

Type of Lease:
- [x] Competitive
- [ ] Noncompetitive
- [ ] Noncompetitive direct use (43 CFR subpart 3205)

Comments:
Per 43 CFR 3200.7(a)(2)
Conversion of all lease terms including royalty provisions.

THE UNITED STATES OF AMERICA

BY _____ (Signing Official)

ATANDA CLARK (Printed Name)

Chief, Branch of Minerals Adjudication (Title) MAR - 1 2010 (Date)

EFFECTIVE DATE OF LEASE 07/01/1976

Check if this is a converted lease [x]

EFFECTIVE DATE OF LEASE CONVERSION 12/01/2008

(Continued on page 2)

ORIGINAL

4. (a) The undersigned certifies that:
(1) The offeror is a citizen of the United States; an association of such citizens; a municipality; or a corporation organized under the laws of the United States, any State or the District of Columbia; (2) All parties holding an interest in the offer are in compliance with 43 CFR part 3200 and the authorizing Act; (3) The offeror's chargeable interests, direct and indirect, do not exceed those allowed under the Act; and (4) The offeror is not considered a minor under the laws of the State in which the lands covered by this offer are located.
(b) The undersigned agrees that signing this offer constitutes acceptance of this lease, including all terms, conditions and stipulations of which the offeror has been given notice. The offeror further agrees that this offer cannot be withdrawn, either in whole or part, unless the withdrawal is received by the proper BLM State Office before this lease, an amendment to this lease, or a separate lease, whichever covers the land described in the withdrawal, has been signed on behalf of the United States.

This offer will be rejected and will afford the offeror no priority if it is not properly completed and executed in accordance with the regulations or if it is not accompanied by the required payments. Title 18 U.S.C. § 1001 makes it a crime for any person knowingly and willfully to make to any Department or agency of the United States any false, fictitious, or fraudulent statements or representations as to any matter within its jurisdiction.

Duly executed this 24th day of February, 2010 Vincent J. Signorotti
(Printed Name of Lessee or Attorney-in-fact) (Signature of Lessee or Attorney-in-fact)

LEASE TERMS

Sec. 1. Rentals—Rentals must be paid to the proper office of the lessor in advance of each lease year. Annual rental rates per acre or fraction thereof, as applicable, are:
(a) Noncompetitive lease (includes post-sale parcels not receiving bids, a direct use lease or a lease issued to a mining claimant): $1.00 for the first 10 years; thereafter $5.00; or
(b) Competitive lease: $2.00 for the first year; $3.00 for the second through tenth year; thereafter $5.00.
Annual rental is always due by the anniversary date of this lease (43 CFR 3211.13), regardless of whether the lease is in a unit or outside of a unit, the lease is in production or not, or royalties or direct use fees apply to the production.
Rental may only be credited toward royalty under 43 CFR 3211.15 and 30 CFR 218.303. Rental may not be credited against direct use fees. Failure to pay annual rental timely will result in late fees and will make the lease subject to termination in accordance with 43 CFR 3213.14.

Sec. 2. (a) Royalties—Royalties must be paid to the proper office of the lessor. Royalties are due on the last day of the month following the month of production. Royalties will be computed in accordance with applicable regulations and orders. Royalty rates for geothermal resources produced for the commercial generation of electricity but not sold in an arm's length transaction are: 1.75 percent for the first 10 years of production and 3.5 percent after the first 10 years. The royalty rate is to be applied to the gross proceeds derived from the sale of electricity in accordance with 30 CFR part 206 subpart H.
The royalty rate for byproducts derived from geothermal resource production that are minerals specified in section 1 of the Mineral Leasing Act (MLA), as amended (30 U.S.C. 181), is 5 percent, except for sodium compounds, produced between September 29, 2006 and September 29, 2011 (Pub. L. No. 109-338, §102; note to 30 U.S.C. 362) for which the royalty rate is 2 percent. No royalty is due on byproducts that are not specified in 30 U.S.C. § 181. (43 CFR 3211.19.)
If this lease or a portion thereof is committed to an approved communitization or unit agreement and the agreement contains a provision for allocation of production, royalties must be paid on the production allocated to this lease.
(b) Arm's length transactions—The royalty rate for geothermal resources sold by you or your affiliate at arm's length to a purchaser is 10 percent of the gross proceeds derived from the arm's-length sale (43 CFR 3211.17, 3211.18).
(c) Advanced royalties—In the absence of a suspension, if you cease production for more than one calendar month on a lease that is subject to royalties and that has achieved commercial production, your lease will remain in effect only if you make advanced royalty payments in accordance with 43 CFR 3212.15(a) and 30 CFR 218.305.
(d) Direct use fees—Direct use fees must be paid in lieu of royalties for geothermal resources that are utilized for commercial, residential, agricultural, or other energy needs other than the commercial production or generation of electricity, but not sold in an arm's length transaction (43 CFR 3211.18; 30 CFR 206.356).
This requirement applies to any direct use of federal geothermal resources (unless the resource is exempted as described in 30 CFR 202.351(b) or the lessee is covered by paragraph (e), below) and is not limited to direct use leases. Direct use fees are due on the last day of the month following the month of production.
(e) If the lessee is a State, tribal, or local government covered by 43 CFR 3211.18(a)(3) and 30 CFR 206.366, check here: ☐. A lessee under this paragraph is not subject to paragraph (d), above. In lieu of royalties, the lessee under this paragraph must pay a nominal fee of
$ _____

Sec. 3. Bonds—A bond must be filed and maintained for lease operations as required by applicable regulations.

Sec. 4. Work requirements, rate of development, unitization, and drainage--Lessee must perform work requirements in accordance with applicable regulations (43 CFR 3207.11, 3207.12), and must prevent unnecessary damage to, loss of, or waste of leased resources. Lessor reserves the right to specify rates of development and production and to require lessee to commit to a communitization or unit agreement, within 30 days of notice, if in the public interest. Lessee must drill and produce wells necessary to protect leased lands from drainage or pay compensatory royalty for drainage in the amount determined by lessor. Lessor will exempt lessee from work requirements only where the lease overlies a mining claim that has an approved plan of operations and where BLM determines that the development of the geothermal resource on the lease would interfere with the mining operation (43 CFR 3207.13).

Sec. 5. Documents, evidence, and inspection—Lessee must file with the proper office of the lessor, not later than (30) days after the effective date thereof, any contract or evidence of other arrangement for the sale, use, or disposal of geothermal resources, byproducts produced, or for the sale of electricity generated using geothermal resources produced from the lease. At such times and in such form as lessor may prescribe, lessee must furnish detailed statements and all documents showing (a) amounts and quality of all geothermal resources produced and used (either for commercial production or generation of electricity, or in a direct use operation) or sold; (b) proceeds derived therefrom or from the sale of electricity generated using such resources; (c) amounts that are unavoidably lost or reinjected before use, used to generate plant parasitic electricity (as defined in 30 CFR 206.351) or electricity for lease operations, or otherwise used for lease operations related to the commercial production or generation of electricity; and (d) amounts and quality of all byproducts produced and proceeds derived from the sale or disposition thereof. Lessee may be required to provide plats and schematic diagrams showing development work and improvements, and reports with respect to parties in interest.
In a format and manner approved by lessor, lessee must: keep a daily drilling record, a log, and complete information on well surveys and tests; keep a record of subsurface investigations; and furnish copies to lessor when required.

Lessee must keep open at all reasonable times for inspection by any authorized officer of lessor, the leased premises and all wells, improvements, machinery, and fixtures thereon, and all books, accounts, maps, and records relative to operations, surveys, or investigations on or in the leased lands. Lessee must maintain copies of all contracts, sales agreements, accounting records, billing records, invoices, gross proceeds and payment data regarding the sale, disposition, or use of geothermal resources, byproducts produced, and the sale of electricity generated using resources produced from the lease, and all other information relevant to determining royalties or direct use fees. All such records must be maintained in lessee's accounting offices for future audit by lessor and produced upon request by lessor or lessor's authorized representative or agent. Lessee must maintain required records for 6 years after they are generated or, if an audit or investigation is underway, until released of the obligation to maintain such records by lessor.

Sec. 6. Conduct of operations—Lessee must conduct operations in a manner that minimizes adverse impacts to the land, air, and water, to cultural, biological, visual, and other resources, and to other land uses or users. Lessee must take reasonable measures deemed necessary by lessor to accomplish the intent of this section. To the extent consistent with leased rights granted, such measures may include, but are not limited to, modification to siting or design of facilities, timing of operations, and specification of interim and final reclamation measures. Lessor reserves the right to continue existing uses and to authorize future uses upon or in the leased lands, including the approval of easements or rights-of-way. Such uses will be conditioned so as to prevent unnecessary or unreasonable interference with rights of lessee. Prior to disturbing the surface of the leased lands, lessee must contact lessor to be apprised of procedures to be followed and modifications or reclamation measures that may be necessary. Areas to be disturbed may require inventories or special studies to determine the extent of impacts to other resources. Lessor may require lessee to complete minor inventories or short term special studies under guidelines provided by lessor. If, in the conduct of operations, threatened or endangered species, objects of historic or scientific interest, or substantial unanticipated environmental effects are observed, lessee must immediately contact lessor. Lessee must cease any operations that are likely to affect or take such species, or result in the modification, damage or destruction of such habitats or objects.

Sec. 7. Production of byproducts—If the production, use, or conversion of geothermal resources from these leased lands is susceptible of producing a valuable byproduct or byproducts, including commercially demineralized water for beneficial uses in accordance with applicable State water laws, lessor may require substantial beneficial production or use thereof by lessee.

Sec. 8. Damages to property—Lessee must pay lessor for damage to lessor's improvements, and must save and hold lessor harmless from all claims for damage or harm to persons or property as a result of lease operations.

Sec. 9. Protection of diverse interests and equal opportunity—Lessee must maintain a safe working environment in accordance with applicable regulations and standard industry practices, and take measures necessary to protect public health and safety. Lessor reserves the right to ensure that production is sold at reasonable prices and to prevent monopoly. Lessee must comply with Executive Order No. 11246 of September 24, 1965, as amended, and regulations and relevant orders of the Secretary of Labor issued pursuant thereto. Neither lessee nor lessee's subcontractor may maintain segregated facilities.

Sec. 10. Transfer of lease interests and relinquishment of lease—As required by regulations, lessee must file with lessor any assignment or other transfer of an interest in this lease. Subject to the requirements of 43 CFR subpart 3213, lessee may relinquish this lease or any legal subdivision by filing in the proper office a written relinquishment, which will be effective as of the date BLM receives it, subject to the continued obligation of the lessee and surety to be responsible for: paying all accrued rentals and royalties; plugging and abandoning all wells on the relinquished land; restoring and reclaiming the surface and other resources; and complying with 43 CFR 3200.4.

Sec. 11. Delivery of premises—At such time as all or portions of this lease are returned to lessor, lessee must place all wells in condition for suspension or abandonment, reclaim the land as specified by lessor, and within a reasonable period of time, remove equipment and improvements not deemed necessary by lessor for preservation of producible wells or continued protection of the environment.

Sec. 12. Proceedings in case of default—If lessee fails to comply with any provisions of this lease or other applicable requirements under 43 CFR 3200.4, and the noncompliance continues for 30 days after written notice thereof, this lease will be subject to termination in accordance with the Act and 43 CFR 3213. This provision will not be construed to prevent the exercise by lessor of any other legal and equitable remedy or action, including waiver of the default. Any such remedy, waiver, or action will not prevent later termination for the same default occurring at any other time. Whenever the lessee fails to comply in a timely manner with any of the provisions of the Act, this lease, the regulations, or other applicable requirements under 43 CFR 3200.4, and immediate action is required, the lessor may enter on the leased lands and take measures deemed necessary to correct the failure at the lessee's expense.

Sec. 13. Heirs and successors-in-interest—Each obligation of this lease will extend to and be binding upon, and every benefit hereof will inure to, the heirs, executors, administrators, successors, or assigns of the respective parties hereto.

(Continued on page 3)

FORT CHURCHILL-CLAN ALPINE
SPECIAL STIPULATIONS

The Lessee shall comply with the following special conditions and stipulations unless they are modified by mutual agreement of the Lessee, the Supervisor and the Authorized Officer:

1. Surface occupancy within 500 feet (horizontal measurement) of any canal, ditch, slough, pond, lake, spring, or open body of water may be restricted or denied where deemed necessary by the appropriate surface management agency to protect wildlife and other resources. Other buffer zones and areas of restricted surface occupancy may be required to protect other resource values, including but not limited to, critical or rare or endangered species habitat.

2. The certified statement required by Section 18 of the lease form must be completed by a qualified archaeologist, acceptable to the Authorized Officer.

3. The use of wide or balloon-tired vehicles and/or helicopters may be required for any activities in off-road areas where deemed necessary to protect the soil and other resources.

4. Springs and water developments on Federal lands may be used only with the prior written approval of the Authorized Officer.

N-61707

United States Department of the Interior

BUREAU OF LAND MANAGEMENT

Nevada State Office
P.O. Box 12000 (1340 Financial Blvd.)
Reno, Nevada 89520-0006
http://www.nv.blm.gov

TAKE PRIDE IN AMERICA

SEP 1 2 2007

In Reply Refer To:
N-43282X et al
3280/3282
3210/3220
NV923.d

CERTIFIED MAIL - RETURN RECEIPT REQUESTED
7005 2570 0001 8534 6261

DECISION

Caithness Dixie Valley, LLC 9590 Prototype Ct., Suite 200 Reno, NV 89521	:	Geothermal

Unit and Participating Area Boundaries Expanded
Leases Consolidated Segregated and Expired

The geothermal leases listed below have been partially committed to the following Unit Agreement (UA) and or Participating Area (PA):

Dixie Valley Unit Agreement and Participating Area, N-43282X, N-4328201
(Unit Name)

May 1, 2007 (Commitment Date)	Caithness Dixie Valley, LLC (Operator)

Departmental regulations 43 CFR 3210.10(1) provide for the segregation of leases committed in part to a unit agreement. Due to the unit expansion, the unitized lands are retained in the original lease; the non-unitized lands are segregated and assigned new serial numbers. The terms of leases included in the expansion of the UA are extended until such time as the subject unit terminates or if the lands are eliminated from the unit agreement (43 CFR 3208.10(4)). The anniversary date for all leases remains unchanged. Rental will be due on the next anniversary date of each lease located within the unit but outside of the PA. Leases or portions of leases within the PA will be subject to royalties. After expansion, lease N-17282 is totally within the Dixie Valley UA. The segregated leases expired on their own terms effective June 30, 2007. The descriptions of the base leases and the segregated leases are as follows:

N-17283A (unitized lands)
T. 24 N., R. 36 E., MDM, Nevada
sec. 22, all.

Containing 640.00 acres

N-84040 (nonunitized lands)
T. 24 N., R. 36 E., MDM, Nevada
sec. 20, E2;
sec. 21, all.
Containing 960.00 acres
Expired June 30, 2007

N-61705 (unitized lands)
T. 24 N., R. 36 E., MDM, Nevada
sec. 24, NW.

Containing 160.00 acres

N-8394 (unitized lands)
T. 24 N., R. 36 E., MDM, Nevada
sec. 01, SE.
Containing 160.00 acres

N-8489 (unitized lands)
T. 25 N., R. 37 E., MDM, Nevada
sec. 28, S2.

Containing 320.00 acres

N-84041 (nonunitized lands)
T. 24 N., R. 36 E., MDM, Nevada
sec. 24, S2;
T. 24 N., R. 37 E., MDM, Nevada
sec. 17, lots 1,2, 7-10, 15, 16;
sec. 19, lots 13-20.
Containing 645.94 acres
Expired June 30, 2007

N-84042 (nonunitized lands)
T. 24 N., R. 36 E., MDM, Nevada
sec. 01, lots 1-4, S2N2, SW.
Containing 479.20 acres
Expired June 30, 2007

N-84043(nonunitized lands)
T. 25 N., R. 37 E., MDM, Nevada
sec. 28, N2;
sec. 29, all.
Containing 960.00 acres
Expired June 30, 2007

Departmental regulations 43 CFR 3207.10(a) and 43 CFR 3208.10(4)(b) provides that the portion of leases included in the PA expansion are placed in additional term effective May 1, 2007, the effective date of the Dixie Valley PA expansion. Due to the PA expansion the portions of the leases that are now within the PA have been consolidated back into the original lease and are subject to royalties under 43 CFR 3211.16. The portions of the leases outside the PA expired on their own terms effective June 30, 2007. The descriptions of the lands consolidated back into the original leases are shown below in **bold**:

N-8317(participating area lands)
T. 24 N., R. 37 E., MDM, Nevada
sec. 04, lots 3,4, S2NW, SW;
sec. 04, lots 1,2, S2NE.
T. 25 N., R. 37 E., MDM, Nevada
sec. 33, N2, SE;
sec. 33, SW.
Containing 1120.80 acres

N-12862 (participating area lands)
T. 24 N., R. 37 E., MDM, Nevada
sec. 05, lots 5-20;
sec. 06, lots 20-23;
sec. 06, lots 8-13, 18, 19.
T. 25 N., R. 37 E., MDM, Nevada
sec. 32, SE;
sec. 32, NE, SW.
Containing 1617.85 acres

N-61704 (lands outside of participating area)
T. 24 N., R. 37 E., MDM, Nevada
sec. 04, SE;
sec. 09, all;
sec. 10, W2.

Containing 1120.00 acres
Expired June 30, 2007

N-61706 (lands outside of participating area)
T. 24 N., R. 37 E., MDM, Nevada
sec. 06, lots 14-17.
T. 25 N., R. 37 E., MDM, Nevada
sec. 32, NW.

Containing 317.55 acres
Expired June 30, 2007

N-12863 (participating area lands)
T. 24 N., R. 36 E., MDM, Nevada
sec. 12, NE, N2SE, SWSE
sec. 13, E2, SW;
T. 24 N., R. 37 E., MDM, Nevada
sec. 07, lots 5-15;
sec. 08, lots 1-16.
Containing 1856.17 acres

N-61707 (unitized lands)
T. 24 N., R. 36 E., MDM, Nevada
sec. 12, W2;
sec. 13, NW.

Containing 480.00 acres

The portion of the lands within lease N-61706 that are now outside the UA and PA expired on their own terms effective June 30, 2007. The lands within the PA that have been consolidated back into N-12862 are subject to royalties. Therefore the petition for reinstatement submitted July 16, 2007, for N-61706 is moot and cannot be considered.

We are evaluating the petition for reinstatement submitted July 16, 2007, for N-61707. This office will provide a separate decision addressing the petition for reinstatement for N-61707.

The Dixie Valley PA is comprised of 6278.84 acres, 5966.30 acres (95.02%) which are federal, 312.54 acres (4.98%) which are private.

If you have any questions please call Chris Pulliam at (775) 861-6506.

Elaine M. Lewis
for Atanda Clark
Chief, Branch of Minerals Adjudication

cc:
Nevada Division of Minerals
400 W. King St., Suite 106
Carson City, NV 89406

NV-920

Minerals Management Service

N-61707

United States Department of the Interior
BUREAU OF LAND MANAGEMENT
Nevada State Office
850 Harvard Way, P.O. Box 12000
Reno, Nevada 89520-0006

RECEIVED
JUN 10 1997

In Reply Refer To:
N-43282X
N-8317 et al
3210/3220
(NV-923.f)

Certified Mail
Return Receipt Requested

JUN 04 1997

June 4, 1997

DECISION

Oxbow Geothermal Corporation	:	Geothermal
5250 S. Virginia Street	:	Resources
Reno, NV 89502	:	Participating Area

Unit Agreement Contracted
Leases Segregated
Leases Extended

"When only part of the land subject to a lease included in a cooperative plan, a communitization agreement, a drilling agreement, or a unit plan is excluded from that plan or agreement because of the contraction of the area subject to that plan or agreement, the part of the lease which is excluded and the part which remains subject to the plan or agreement shall be segregated into separate leases." (*Reference 43 CFR 3203.1-5(b).*) The Dixie Valley Unit Agreement is hereby contracted to the boundaries of the Dixie Valley Participating Area effective July 1, 1997. The descriptions of the base and segregated leases are as follows:

N-8317 (participating area lands)

T. 24 N., R. 37 E., MDM, Nevada
sec. 04, lots 3,4, S½NW¼, SW¼.

T. 25 N., R. 37 E., MDM, Nevada
sec. 33, SW¼.

Containing: 480.28 acres

N-61704 (lands outside of participating area)

T. 24 N., R. 37 E., MDM, Nevada
sec. 04, lots 1,2, S½NE¼, SE¼;
sec. 09, all;
sec. 10, W½.

T. 25 N., R. 37 E., MDM, Nevada
sec. 33, N½, SW¼.

Containing: 1760.52 acres

N-12393 (participating area lands)

T. 24 N., R. 36 E., MDM, Nevada
sec. 24, NE¼;

T. 24 N., R. 37 E., MDM, Nevada
sec. 17, lots 3-6, 11-14;
sec. 18, lots 5-18;
sec. 19, lots 5-12.

Containing: 1371.47 acres

N-12862 (participating area lands)

T. 24 N., R. 37 E., MDM, Nevada
sec. 05, lots 5-20;
sec. 06, lots 20-23;

T. 25 N., R. 37 E., MDM, Nevada
sec. 32, SE¼.

Containing: 974.22 acres

N-12863 (participating area lands)

T. 24 N., R. 36 E., MDM, Nevada
sec. 13, E½, SW¼;

T. 24 N., R. 37 E., MDM, Nevada
sec. 07, lots 5-15;
sec. 08, lots 1-16;

Containing: 1576.17 acres

N-61705 (lands outside of participating area)

T. 24 N., R. 36 E., MDM, Nevada
sec. 24, W½, SE¼;

T. 24 N., R. 37 E., MDM, Nevada
sec. 17, lots 1,2,7-10,15,16;
sec. 19, lots 13-20.

Containing: 1125.94 acres

N-61706 (lands outside of participating area)

T. 24 N., R. 37 E., MDM, Nevada
sec. 06, lots 8-19;

T. 25 N., R. 37 E., MDM, Nevada
sec. 32, N½ SW¼.

Containing: 961.18 acres

N-61707 (lands outside of participating area)

T. 24 N., R. 36 E., MDM, Nevada
sec. 12, N½, N½S½, S½SW¼, SW¼ SE¼;
sec. 13, NW¼.

Containing: 760.00 acres

After contraction and segregation, leases N-8317, N-12393, N-12862 and N-12863 are totally within the Dixie Valley Unit Agreement/Participating Area. Leases N-8317 and N-12863 are held by actual production. Leases N-12393 and N-12862 are held by allocated production. Segregated leases N-61704 through N-61707, and the leases listed below, are now totally outside the Dixie Valley Unit Agreement/Participating Area and are no longer held by location in a producing unit:

N-8392	N-8491A	N-12864	N-17284
N-8393	N-8498	N-14971	N-17285
N-8394	N-9861	N-14972	N-17286
N-8395	N-10706	N-14974	N-60687
N-8489	N-11583	N-17283	
N-8491	N-12395	N-17283A	

61704
61705
61706
61707

As requested in your letter of April 17, 1997, the leases listed above, with the exception of lease N-60687, were specified as candidates for Steam Act Amendment extensions. In addition, the lands that are now contained in leases N-61704 through N-61707, were listed in that request.

The leases identified in the above paragraph are hereby given initial five-year Steam Act Amendment extensions *(reference 43 CFR 3208.1-4(c))*, effective July 1, 1997. Lease N-60687 is not extended as it is currently in its initial term, and therefore, does not qualify for a Steam Act extension.

The anniversary date for all leases remains unchanged. Rental will be due on the next anniversary of each lease. As the option selected in your April 17, 1997, letter, an additional payment of $3.00 per acre or fraction thereof in lieu of commercial quantities production will also be required on the anniversary date of each lease.

If you have any questions, please call Jack Lewis at (702) 785-6538.

Wayne M. Forman
for Thomas V. Leshendok
Deputy State Director, Minerals Management

ORIGINAL PAPERS BOOK 153 PAGE 572 800886

Form 3280-1 (May 1974)

TITLE RECORD DEPARTMENT
SUNOCO ENERGY DEVELOPMENT
12700 Park Central Place, Suite 1500
Dallas, Texas 75251

UNITED STATES
DEPARTMENT OF THE INTERIOR
BUREAU OF LAND MANAGEMENT

RECEIVED
Bureau of Land Management
A. M. MAY 21 1976
NEVADA STATE OFFICE
RENO, NEVADA

Serial Number N-12863

USGS – KGRA Determination:

April 1, 1974

GEOTHERMAL RESOURCES LEASE

☒ Competitive ☐ Noncompetitive

In consideration of the terms and conditions contained herein, and the grant made hereby, this lease is entered into by the UNITED STATES OF AMERICA (hereinafter called the "Lessor"), acting through the Bureau of Land Management (hereinafter called the "Bureau") of the Department of the Interior (hereinafter called the "Department"), and

Sunoco Energy Development Co., 12700 Park Central Place, Suite 1500, Dallas, TX 75251 (hereinafter called the "Lessee").

This lease is made pursuant to the Geothermal Steam Act of 1970 (84 Stat. 1566; 30 U.S.C. 1001–1025) (hereinafter called "the Act") to be effective on July 1, 1976 (hereinafter called the "effective date"). It is subject to all the provisions of the Act and to all the terms, conditions, and requirements of (a) all regulations promulgated by the Secretary of the Interior (hereinafter called "the Secretary") in existence upon the effective date, specifically including, but not limited to, 43 CFR Parts 3000 and 3200 and 30 CFR Parts 270 and 271, (b) all geothermal resources operational orders (hereinafter called "GRO orders") issued pursuant thereto, all of which are incorporated herein and by reference made a part hereof, and (c) any regulations hereafter issued by the Secretary (except those inconsistent with any specific provisions of this lease other than regulations incorporated herein by reference) all of which shall be, upon their effective date, incorporated herein and, by reference, made a part hereof.

Sec. 1. GRANT – The Lessor hereby grants and leases to the Lessee the exclusive right and privilege to drill for, extract, produce, remove, utilize, sell, and dispose of geothermal steam and associated geothermal resources, (hereinafter called "geothermal resources"), in or under the following described lands situated within the County of Churchill, State of Nevada:

National Resource Lands	Acquired Lands
T. 24 N., ; R. 36 E., ; Mount Diablo Meridian sec. 12, N½, N½S½, S½SW¼, SW¼SE¼; sec. 13, All. T. 24 N., R. 37 E., Mount Diablo Meridian sec. 7, Lots 1, 2, 3, NE¼, E½NW¼, E½SE¼; sec. 8, All.	T. ; R. ; Meridian
Total Area 2308.59	Total Area

Containing 2308.59 acres (hereinafter called the "leased area" or "leased lands"), together with:

(a) The nonexclusive right to conduct within the leased area geological and geophysical exploration in accordance with applicable regulations; and

(b) The right to construct or erect and to use, operate, and maintain within the leased area, together with ingress and egress thereupon all wells, pumps, pipes, pipelines, buildings, plants, sumps, brine pits, reservoirs, tanks, waterworks, pumping stations, roads, electric power generating plants, transmission lines, industrial facilities, electric, telegraph or telephone lines, and such other works and structures and to use so much of the surface of the land as may be necessary or reasonably convenient for the production, utilization, and processing of geothermal resources or to the full enjoyment of the rights granted by this lease, subject to compliance with applicable laws and regulations; *Provided that*, although the use of the leased area for an electric power generating plant or transmission facilities or a commercial or industrial facility is authorized hereunder, the location of such facilities and the terms of occupancy therefor shall be under separate instruments issued under any applicable laws and regulations; and

(c) The nonexclusive right to drill potable water wells in accordance with state water laws within the leased area and to use the water produced therefrom for operations on the leased lands free of cost, provided that such drilling and development are conducted in accordance with procedures approved by the Supervisor of the Geological Survey (hereinafter called "Supervisor"); and

(d) The right to convert this lease to a mineral lease under the Mineral Leasing Act of February 25, 1920, as amended, and supplemented (30 U.S.C. 181–287) or under the Mineral Leasing Act for Acquired Lands (30 U.S.C. 351–359), whichever is appropriate, if the leasehold is primarily valuable for the production of one or more valuable by-products which are leasable under those statutes, and the lease is incapable of commercial production or utilization of geothermal steam: *Provided that*, an application is made therefor prior to the expiration of the lease extension by reason of by-product production as hereinafter provided, and subject to all the terms and conditions of said appropriate Acts. The Lessee is also granted the right to locate mineral deposits under the mining laws (30 U.S.C. 21–54), which would constitute by-products if commercial production or utilization of geothermal steam continued, but such a location to be valid must be completed within ninety (90) days after the termination of this lease. Any conversion of this lease to a mineral lease or a mining claim is contingent on the availability of such lands for this purpose at the time of the conversion. If the lands are withdrawn or acquired in aid of a function of any Federal Department or agency, the mineral lease or mining claim shall be subject to such additional terms and conditions as may be prescribed by such Department or agency for the purpose of making operations thereon consistent with the purposes for which these lands are administered; and

(e) The right, without the payment of royalties hereunder, to reinject into the leased lands geothermal resources and condensates to the extent that such resources and condensates are not utilized, but their reinjection is necessary for operations under this lease in the recovering or processing of geothermal resources. If the Lessee, pursuant to any approved plan, disposes of the unusable brine and produced waste products into underlying formations, he may do so without the payment of royalties.

Sec. 2. TERM

(a) This lease shall be for a primary term of ten (10) years from the effective date and so long thereafter as geothermal steam is produced or utilized in commercial quantities but shall in no event continue for more than forty (40) years after the end of the primary term. However, if at the end of that forty-year period geothermal steam is being produced or utilized in commercial quantities, and the leased lands are not needed for other purposes, the Lessee shall have a preferential right to a renewal of this lease for a second forty-year term in accordance with such terms and conditions as the Lessor deems appropriate.

(b) If actual drilling operations are commenced on the leased lands or under an approved plan or agreement on behalf of the leased lands prior to the end of the primary term, and are being diligently prosecuted at the end of the primary term, this lease shall be extended for five (5) years and so long thereafter, but not more than thirty-five (35) years, as geothermal steam is produced or utilized in commercial quantities. If at the end of such extended term geothermal steam is being produced or utilized in commercial quantities, the Lessee shall have a preferential right to a renewal for a second term as in (a) above.

(c) If the Lessor determines at any time after the primary term that this lease is incapable of commercial production and utilization of geothermal steam, but one or more valuable by-products are or can be produced in commercial quantities, this lease shall be extended for so long as such by-products are produced in commercial quantities but not for more than five (5) years from the date of such determination.

Sec. 3. RENTALS AND ROYALTIES

(a) *Annual Rental* – For each lease year prior to the commencement of production of geothermal resources in commercial quantities on the leased lands, the Lessee shall pay the Lessor on or before the anniversary date of the lease a rental of $ 2.00 for each acre or fraction thereof.

(b) *Escalating Rental* – Beginning with the sixth lease year and for each year thereafter until the lease year beginning on or after the commencement of production of geothermal resources in commercial quantities, the Lessee shall pay on or before the anniversary date of the lease an escalated rental in an amount per acre or fraction thereof equal to the rental per acre for the preceding year and an additional sum of one (1) dollar per acre or fraction thereof. If the lease is extended beyond ten (10) years for reasons other than the commencement of production of geothermal resources in commercial quantities, the rental for the eleventh year and for each lease year thereafter until the lease year beginning on or after the commencement of such production will be the amount of rental for the tenth lease year. If any expenditures are made in any lease year for diligent exploration on the leased lands in excess of the minimum required expenditures for that year, the excess may be credited against any rentals in excess of $ 2.00 per acre or fraction thereof due the Lessor for that or any future year.

(c) *Royalty* – On or before the last day of the calendar month after the month of commencement of production in commercial quantities of geothermal resources and thereafter on a monthly basis, the Lessee shall pay to the Lessor:

(1) A royalty of 10 percent on the amount or value of steam, or any other form of heat or other associated energy produced, processed, removed, sold, or utilized from this lease or reasonably susceptible to sale or utilization by the Lessee.

(2) A royalty of 5 percent of the value of any by-product derived from production under this lease, produced, processed, removed, sold, or utilized from this lease or reasonably susceptible of sale or utilization by the Lessee, except that as to any by-product which is a mineral named in Sec. 1 of the Mineral Leasing Act of February 25, 1920, as amended, (30 U.S.C. 181), the rate of royalty for such mineral shall be the same as that provided in that statute and the maximum rate of royalty for such mineral shall not exceed the maximum royalty applicable under that statute.

(3) A royalty of 5 percent of the value of commercially demineralized water which has been produced from the leased lands, and has been sold or utilized by the Lessee or is reasonably susceptible of sale or utilization by the Lessee. In no event shall the Lessee pay to the Lessor, for the lease year beginning on or after the commencement of production in commercial quantities on the leased lands or any subsequent lease year, a royalty of less than two (2) dollars per acre or fraction thereof. If royalty paid on production during the lease year has not satisfied this requirement, the Lessee shall pay the difference on or before the expiration date of the lease year for which it is paid.

(d) *Waiver and Suspension of Rental and Royalties* – Rentals or royalties may be waived, suspended, or reduced pursuant to the applicable regulations on the entire leasehold or any portion thereof in the interest of conservation or for the purpose of encouraging the greatest ultimate recovery of geothermal resources if the Lessor determines that it is necessary to do so to promote such development, or because the lease cannot be successfully operated under the terms fixed herein.

(e) *Undivided Fractional Interests* – Where the interest of the Lessor in the geothermal resources underlying any tract or tracts described in Sec. 1 is an undivided fractional interest, the rentals and royalties payable on account of each such tract shall be in the same proportion to the rentals and royalties provided in this lease as the individual fractional interest of the Lessor in the geothermal resources underlying such tract is to the full fee interest.

(f) *Readjustments* – Rentals and royalties hereunder may be readjusted in accordance with the Act and regulations to rates not in excess of the rates provided therein, and at not less than twenty (20) year intervals beginning thirty-five (35) years after the date geothermal steam is produced from the lease as determined by the Supervisor.

Sec. 4. PAYMENTS – It is expressly understood that the Secretary may establish the values and minimum values of geothermal resources to compute royalties in accordance with the applicable regulations. Unless otherwise directed by the Secretary, all payments to the Lessor will be made as required by the regulations. If there is no well on the leased lands capable of producing geothermal resources in commercial quantities, the failure to pay rental on or before the anniversary date shall cause the lease to terminate by operation of law except as provided by Sec. 3244.2 of the regulations. If the time for payment falls on a day on which the proper office to receive payment is closed, payment shall be deemed to be made on time if made on the next official working day.

Sec. 5. BONDS – The Lessee shall file with the Authorized Officer of the Bureau (hereinafter called the "Authorized Officer") shall maintain at all times the bonds required under the regulations to be furnished as a condition to the issuance of this lease or prior to entry on the leased lands in the amounts established by the Lessor and to furnish such additional bonds or security as may be required by the Lessor upon entry on the lands or after operations or production have begun.

Sec. 6. WELLS

(a) The Lessee shall drill and produce all wells necessary to protect the leased land from drainage by operations on lands not the property of the Lessor, or other lands of the Lessor leased at a lower royalty rate, or on lands as to which royalties and rentals are paid into different funds from those into which royalties under this lease are paid. However, in lieu of any part of such drilling and production, with the consent of the Supervisor, the Lessee may compensate the Lessor in full each month for the estimated loss of royalty through drainage in the amount determined by said Supervisor.

(b) At the Lessee's election, and with the approval of the Supervisor, the Lessee shall drill and produce other wells in conformity with any system of well spacing or production allotments affecting the field or area in which the leased lands are situated, which is authorized by applicable law.

(c) After due notice in writing, the Lessee shall diligently drill and produce such wells as the Supervisor shall require so that the leased lands may be properly and timely developed and for the production of geothermal steam and its by-products, including commercially demineralized water for beneficial uses in accordance with applicable state laws. However, the Supervisor may waive or modify the requirements of this subparagraph (c) in the interest of conservation of natural resources or for economic feasibility or other reasons satisfactory to him. If the products or by-products of geothermal production from wells drilled on this lease are susceptible of producing commercially demineralized water for beneficial uses, and a program therefor is not initiated with due diligence, the Lessor may at its option elect to take such products or by-products and the Lessee shall deliver all or any portion thereof to the Lessor at any point in the Lessee's geothermal gathering or disposal system without cost to the Lessee, if the Lessee's activities, under the lease, would not be impaired and such delivery would otherwise be consistent with field and operational requirements. The retention of this option by the Lessor shall in no way relieve the Lessee from the duty of producing commercially demineralized water where required to do so by the Lessor, except when the option is being exercised and then only with respect to wells where it is being exercised, or limit the Lessor's right to take any action under Sec. 25 to enforce that requirement.

Sec. 7. INSPECTION – The Lessee shall keep open at all reasonable times for the inspection of any duly authorized representative of the Lessor the leased lands and all wells, improvements, machinery, and fixtures thereon and all production reports, maps, records, books, and accounts relative to operations under the lease, and well logs, surveys, or investigations of the leased lands.

Sec. 8. CONDUCT OF OPERATIONS – The Lessee shall conduct all operations under this lease in a workmanlike manner and in accordance with all applicable statutes, regulations, and GRO orders, and all other appropriate directives of the Lessor to prevent bodily injury, danger to life or health, or property damage, and to avoid the waste of resources, and shall comply with all requirements which are set forth in 43 CFR Group 3200, including, but not limited to, Subpart 3204, or which may be prescribed by the Lessor pursuant to the regulations, and with the special stipulations which are attached to the lease, all of which are specifically incorporated into this lease. A breach of any term of this lease, including the stipulations attached hereto, will be subject to all the provisions of this lease with respect to remedies in case of default. Where any stipulation is inconsistent with a regular provision of this lease, the stipulation shall govern.

Sec. 9. INDEMNIFICATION

(a) The Lessee shall be liable to the Lessor for any damage suffered by the Lessor in any way arising from or connected with the Lessee's activities and operations conducted pursuant to this lease, except where damage is caused by employees of the Lessor acting within the scope of their authority.

(b) The Lessee shall indemnify and hold harmless the Lessor from all claims arising from or connected with the Lessee's activities and operations under this lease.

(c) In any case where liability without fault is imposed on the Lessee pursuant to this section, and the damages involved were caused by the action of a third party, the rules of subrogation shall apply in accordance with the law of the jurisdiction where the damage occurred.

Sec. 10. CONTRACTS FOR SALE OR DISPOSAL OF PRODUCTS – The Lessee shall file with the Supervisor not later than thirty (30) days after the effective date thereof any contract, or evidence of other arrangement for the sale or disposal of geothermal resources.

Sec. 11. ASSIGNMENT OF LEASE OR INTEREST THEREIN – Within ninety (90) days from the date of execution thereof, the Lessee shall file for approval by the Authorized Officer any instruments of transfer made of this lease or of any interest therein, including assignments of record title and working or other interests.

Sec. 12. REPORTS AND OTHER INFORMATION – At such times and in such form as the Lessor may prescribe, the Lessee shall comply with all reporting requirements of the geothermal resources leasing, operating, and unit regulations and shall submit quarterly reports containing the data which it has collected through the monitoring of air, land, and water quality and all other data pertaining to the effect on the environment by operations under the lease. The Lessee shall also comply with such other reporting requirements as may be imposed by the Authorized Officer or the Supervisor. The Lessor may release to the general public any reports, maps, or other information submitted by the Lessee except geologic and geophysical interpretations, maps, or data subject to 30 CFR 270.79 or unless the Lessee shall designate that information as proprietary and the Supervisor or the Authorized Officer shall approve that designation.

Sec. 13. DILIGENT EXPLORATION – In the manner required by the regulations, the Lessee shall diligently explore the leased lands for geothermal resources until there is production in commercial quantities applicable to this lease. After the fifth year of the primary term the Lessee shall make at least

the minimum expenditures required to qualify the operations on the leased lands as diligent exploration under the regulations.

Sec. 14. PROTECTION OF THE ENVIRONMENT (LAND, AIR AND WATER) AND IMPROVEMENTS — The Lessee shall take all mitigating actions required by the Lessor to prevent: (a) soil erosion or damage to crops or other vegetative cover on Federal or non-Federal lands in the vicinity; (b) the pollution of land, air, or water; (c) land subsidence, seismic activity, or noise emissions; (d) damage to aesthetic and recreational values; (e) damage to fish or wildlife or their habitats; (f) damage to or removal of improvements owned by the United States or other parties; or (g) damage to or destruction or loss of fossils, historic or prehistoric ruins, or artifacts. Prior to the termination of bond liability or at any other time when required and to the extent deemed necessary by the Lessor, the Lessee shall reclaim all surface disturbances as required, remove or cover all debris or solid waste, and, so far as possible, repair the offsite and onsite damage caused by his activity or activities incidental thereto, and return access roads or trails and the leased lands to an acceptable condition including the removal of structures, if required. The Supervisor or the Authorized Officer shall prescribe the steps to be taken by Lessee to protect the surface and the environment and for the restoration of the leased lands and other lands affected by operations on the leased lands and improvements thereon, whether or not the improvements are owned by the United States. Timber or mineral materials may be obtained only on terms and conditions imposed by the Authorized Officer.

Sec. 15. WASTE — The Lessee shall use all reasonable precautions to prevent waste of natural resources and energy, including geothermal resources, or of any minerals, and to prevent the communication of water or brine zones with any oil, gas, fresh water, or other gas or water bearing formations or zones which would threaten destruction or damage to such deposits. The Lessee shall monitor noise, air, and water quality conditions in accordance with any orders of the Supervisor.

Sec. 16. MEASUREMENTS — The Lessee shall gauge or otherwise measure all production, sales, or utilization of geothermal resources and shall record the same accurately in records as required by the Supervisor. Reports on production, sales, or utilization of geothermal resources shall be submitted in accordance with the terms of this lease and the regulations.

Sec. 17. RESERVATIONS TO LESSOR — All rights in the leased area not granted to the Lessee by this lease are hereby reserved to the Lessor. Without limiting the generality of the foregoing such reserved rights include:

(a) *Disposal* — The right to sell or otherwise dispose of the surface of the leased lands or any resource in the leased lands under existing laws, or laws hereafter enacted, subject to the rights of the Lessee under this lease;

(b) *Rights-of-way* — The right to authorize geological and geophysical explorations on the leased lands which do not interfere with or endanger actual operations under this lease, and the right to grant such easements or rights-of-way for joint or several use upon, through or in the leased area for steam lines and other public or private purposes which do not interfere with or endanger actual operations or facilities constructed under this lease;

(c) *Mineral Rights* — The ownership of and the right to extract oil, hydrocarbon gas, and helium from all geothermal steam and associated geothermal resources produced from the leased lands;

(d) *Casing* — The right to acquire the well and casing at the fair market value of the casing where the Lessee finds only potable water, and such water is not required in lease operations; and

(e) *Measurements* — The right to measure geothermal resources and to sample any production thereof.

Sec. 18. ANTIQUITIES AND OBJECTS OF HISTORIC VALUE — The Lessee shall immediately bring to the attention of the Authorized Officer any antiquities or other objects of historic or scientific interest, including but not limited to historic or prehistoric ruins, fossils, or artifacts discovered as a result of operations under this lease, and shall leave such discoveries intact. Failure to comply with any of the terms and conditions imposed by the Authorized Officer with regard to the preservation of antiquities may constitute a violation of the Antiquities Act (16 U.S.C. 431-433). Prior to operations, the Lessee shall furnish to the Authorized Officer a certified statement that either no archaeological values exist or that they may exist on the leased lands to the best of the of the Lessee's knowledge and belief and that they might be impaired by geothermal operations. If the Lessee furnishes a statement that archaeological values may exist where the land is to be disturbed or occupied, the Lessee will engage a qualified archaeologist, acceptable to the Authorized Officer, to survey and salvage, in advance of any operations, such archaeological values on the lands involved. The responsibility for the cost for the certificate, survey, and salvage will be borne by the Lessee, and such salvaged property shall remain the property of the Lessor or the surface owner.

Sec. 19. DIRECTIONAL DRILLING — A directional well drilled under the leased area from a surface location on nearby land not covered by the lease shall be deemed to have the same effect for all purposes of this lease as a well drilled from a surface location on the leased area. In such circumstances, drilling shall be considered to have been commenced on the nearby land for the purposes of this lease, and production of geothermal resources from the leased area through any directional well located on nearby land, or drilling or reworking of any such directional well shall be considered production or drilling or reworking operations (as the case may be) on the leased area for all purposes of this lease. Nothing contained in this section shall be construed as granting to the Lessee any right in any land outside the leased area.

Sec. 20. OVERRIDING ROYALTIES — The Lessee shall not create overriding royalties of less than one-quarter (1/4) of one percent of the value of output nor in excess of 50 percent of the rate of royalty due to the Lessor specified in Sec. 3 of this lease except as otherwise authorized by the regulations. The Lessee expressly agrees that the creation of any overriding royalty which does not provide for a prorated reduction of all overriding royalties so that the aggregate rate of royalties does not exceed the maximum rate permissible under this section, or the failure to suspend an overriding royalty during any period when the royalties due to the Lessor have been suspended pursuant to the terms of this lease, shall constitute a violation of the lease terms.

Sec. 21. READJUSTMENT OF TERMS AND CONDITIONS — The terms and conditions of this lease other than those related to rentals and royalties may be readjusted in accordance with the Act at not less than ten-year intervals beginning ten (10) years after the date geothermal steam is produced from the leased premises as determined by the Supervisor.

Sec. 22. COOPERATIVE OR UNIT PLAN — The Lessee agrees that it will on its own, or at the request of the Lessor where it is determined to be necessary for the conservation of the resource or to prevent the waste of the resource, subscribe to and operate under any reasonable cooperative or unit plan for the development and operation of the area, field, or pool, or part thereof embracing the lands subject to this lease as the Secretary may determine to be practicable and necessary or advisable in the interest of conservation. In the event the leased lands are included within a unit, the terms of this lease shall be deemed to be modified to conform to such unit agreement. Where any provision of a cooperative or unit plan of development which has been approved by the Secretary, and which by its terms affects the leased area or any part thereof, is inconsistent with a provision of this lease, the provisions of such cooperative or unit plan shall govern.

Sec. 23. RELINQUISHMENT OF LEASE — The Lessee may relinquish this entire lease or any officially designated subdivision of the leased area in accordance with the regulations by filing in the proper BLM office a written relinquishment, in triplicate, which shall be effective as of the date of filing. No relinquishment of this lease or any portion of the leased area shall relieve the Lessee or its surety from any liability for breach of any obligation of this lease, including the obligation to make payment of all accrued rentals and royalties and to place all wells in the leased lands to be relinquished in condition for suspension or abandonment, and to protect or restore substantially the surface or subsurface resources in a manner satisfactory to the Lessor.

Sec. 24. REMOVAL OF PROPERTY ON TERMINATION OR EXPIRATION OF LEASE

(a) Upon the termination or expiration of this lease in whole or in part, or the relinquishment of the lease in whole or in part, as herein provided, the Lessee shall within a period of ninety (90) days (or such longer period as the Supervisor may authorize because of adverse climatic conditions) thereafter remove from the leased lands, no longer subject to the lease all structures, machinery, equipment, tools, and materials in accordance with applicable regulations and orders of the Supervisor. However, the Lessee shall, for a period of not more than six (6) months, continue to maintain any such property needed in the relinquished area, as determined by the Supervisor, for producing wells or for drilling or producing geothermal resources on other leases.

(b) Any structures, machinery, equipment, tools, appliances, and materials, subject to removal by the Lessee, as provided above, which are allowed to remain on the leased lands shall become the property of the Lessor on expiration of the 90-day period or any extension of that period which may be granted by the Supervisor. If the Supervisor directs the Lessee to remove such property, the Lessee shall do so at its own expense, or if it fails to do so within a reasonable period, the Lessor may do so at the Lessee's expense.

Sec. 25. REMEDIES IN CASE OF DEFAULT

(a) Whenever the Lessee fails to comply with any of the provisions of the Act, or the terms and stipulations of this lease, or of the regulations issued under the Act, or of any order issued pursuant to those regulations, and that default shall continue for a period of thirty (30) days after service of notice by the Lessor, the Lessor may (1) suspend operations until the requested action is taken to correct the noncompliance, or (2) cancel the lease in accordance with Sec. 12 of the Act (30 U.S.C. 1011). However, the 30-day notice provision applicable to this lease under Sec. 12 of the Act shall also apply as a prerequisite to the institution of any legal proceedings by the Lessor to cancel this lease while it is in a producing status. Nothing in this subsection shall be construed to apply to, or require any notice with respect to any legal action instituted by the Lessor other than an action to cancel the lease pursuant to Sec. 12 of the Act.

(b) Whenever the Lessee fails to comply with any of the provisions of the Act, or of this lease, or the regulations, or of any GRO Orders, or other orders, and immediate action is required, the Lessor without waiting for action by the Lessee may enter on the leased lands and take such measures as it may deem necessary to correct the failure, including a suspension of operations or production, all at the expense of the Lessee.

(c) A waiver of any particular violation of the provisions of the Act, or of this lease, or of any regulations promulgated by the Secretary under the Act, shall not prevent the cancellation of this lease or the exercise of any other remedy or remedies under paragraphs (a) and (b) of this section by reason of any other such violation, or for the same violation occuring at any other time.

(d) Nothing herein shall limit or effect the Lessee's right to a hearing and appeal as provided in Sec. 12 of the

Act and in the regulations promulgated thereunder.

(e) Upon cancellation, the Lessee shall remove all property in accordance with Sec. 24 hereof, and shall restore the leased lands in a manner acceptable to the Lessor or as may be otherwise required by the Lessor.

Sec. 26. HEIRS AND SUCCESSORS IN INTEREST – Each obligation hereunder shall extend to and be binding upon, and every benefit hereof shall inure to, the heirs, executors, administrators, successors, or assigns, of the respective parties hereto.

Sec. 27. UNLAWFUL INTEREST – No Member of, or Delegate to Congress, or Resident Commissioner, after his election or appointment, either before or after he has qualified, and during his continuance in office, and no officer, agent, or employee of the Department shall be admitted to any share or part in this lease or derive any benefit that may arise therefrom; and the provisions of Sec. 3741 of the Revised Statutes (41 U.S.C. Sec. 22), as amended, and Sections 431, 432, and 433 of Title 18 of the United States Code, relating to contracts made or entered into, or accepted by or on behalf of the United States, form a part of this lease so far as the same may be applicable.

Sec. 28. MONOPOLY AND FAIR PRICES – The Lessor reserves full power and authority to protect the public interest by promulgating and enforcing all orders necessary to insure the sale of the production from the leased lands at reasonable prices, to prevent monopoly, and to safeguard the public interest.

Sec. 29. EQUAL OPPORTUNITY CLAUSE – The Lessee agrees that, during the performance of this contract:

(1) The Lessee will not discriminate against any employee or applicant for employment because of race, color, religion, sex, or national origin. The Lessee will take affirmative action to ensure that applicants are employed, and that employees are treated during employment, without regard to their race, color, religion, sex, or national origin. Such action shall include, but not be limited to the following: employment, upgrading, demotion, or transfer; recruitment or recruitment advertising, layoff or termination; rates of pay or other forms of compensation; and selection for training, including apprenticeship. The Lessee agrees to post in conspicuous places, available to employees and applicants for employment, notices to be provided by the Lessor setting forth the provisions of this Equal Opportunity clause.

(2) The Lessee will, in all solicitations or advertisements for employees placed by or on behalf of the Lessee, state that all qualified applicants will receive consideration for employment without regard to race, color, religion, sex, or national origin.

(3) The Lessee will send to each labor union or representative of workers with which Lessee has a collective bargaining agreement or other contract or understanding, a notice, to be provided by the Lessor, advising the labor union or workers' representative of the Lessee's commitments under this Equal Opportunity clause, and shall post copies of the notice in conspicuous places available to employees and applicants for employment.

(4) The Lessee will comply with all provisions of Executive Order No. 11246 of September 24, 1965, as amended, and of the rules, regulations, and relevant orders of the Secretary of Labor.

(5) The Lessee will furnish all information and reports required by Executive Order No. 11246 of September 24, 1965, as amended, and by the rules, regulations, and orders of the Secretary of Labor, or pursuant thereto, and will permit access to its books, records, and accounts by the Secretary of the Interior and the Secretary of Labor for purposes of investigation to ascertain compliance with such rules, regulations, and orders.

(6) In the event of the Lessee's noncompliance with the Equal Opportunity clause of this lease or with any of said rules, regulations, or orders, this lease may be canceled, terminated or suspended in whole or in part and the Lessee may be declared ineligible for further Federal Government contracts or leases in accordance with procedures authorized in Executive Order No. 11246 of September 24, 1965, as amended, and such other sanctions as may be imposed and remedies invoked as provided in Executive Order No. 11246 of September 24, 1965, as amended, or by rule, regulation, or order of the Secretary of Labor, or as otherwise provided by law.

(7) The Lessee will include the provisions of Paragraphs (1) through (7) of this Section (29) in every contract, subcontract or purchase order unless exempted by rules, regulations, or orders of the Secretary of Labor issued pursuant to Section 204 of Executive Order No. 11246 of September 24, 1965, as amended, so that such provisions will be binding upon each contractor, subcontractor, or subcontract, or purchase order as the Secretary may direct as a means of enforcing such provisions including sanctions for noncompliance; *provided, however,* that in the event the Lessee becomes involved in, or is threatened with, litigation with a contractor, subcontractor, or vendor as a result of such direction by the Secretary, the Lessee may request the Lessor to enter into such litigation to protect the interests of the Lessor.

Sec. 30. CERTIFICATION OF NONSEGREGATED FACILITIES – By entering into this lease, the Lessee certifies that it does not and will not maintain or provide for its employees any segregated facilities at any of its establishments, and that it does not and will not permit its employees to perform their services at any location, under its control, where segregated facilities are maintained. The Lessee agrees that a breach of this certification is a violation of the Equal Opportunity clause of this lease. As used in this certification, the term "segregated facilities" means, but is not limited to, any waiting rooms, work areas, rest rooms and wash rooms, or restaurants or other eating areas, time clocks, or locker rooms, and other storage or dressing rooms, parking lots, drinking fountains, recreation or entertainment areas, transportation, and housing facilities provided for employees which are segregated by explicit directive, or are in fact segregated on the basis of race, color, religion, or national origin because of habit, local custom, or otherwise. Lessee further agrees that (except where it has obtained identical certifications from proposed contractors and subcontractors for specific time periods) it will obtain identical certifications from proposed contractors and subcontractors prior to the award of contracts or subcontracts exceeding $10,000 which are not exempt from the provisions of the Equal Opportunity clause; that it will retain such certifications in its files; and that it will forward the following certification to such proposed contractors and subcontractors (except where the proposed contractor or subcontractor has submitted identical certifications for specific time periods); it will notify prospective contractors and subcontractors of requirement for certification of nonsegregated facilities. A Certification of Nonsegregated Facilities, as required by the May 9, 1967 Order (32 F.R. 7439, May 19, 1967) on Elimination of Segregated Facilities, by the Secretary of Labor, must be submitted prior to the award of a contract or subcontract exceeding $10,000 which is not exempt from the provisions of the Equal Opportunity clause. The certification may be submitted either for each contract and subcontract or for all contracts and subcontracts during a period (i.e., quarterly, semiannually, or annually).

Sec. 31. SPECIAL STIPULATIONS – *(stipulations, if any, are attached hereto and made a part hereof)*

The certified statement required by Section 18 of the lease form must be completed by a qualified archaeologist, acceptable to the Authorized Officer.

The attached Fort Churchill-Alpine Special Stipulations apply to all lands within this lease.

In witness whereof the parties have executed this lease.

Lessee:
Sunoco Energy Development Co.
W. L. Parchman, Jr.
(Signature of Lessee)
W. L. Parchman, Jr.
Agent and Attorney-in-fact
(Signature of Lessee)
May 14, 1976
SEAL (Date)

THE UNITED STATES OF AMERICA, Lessor:
By Maeva L. Gilland Acting
(Authorized Officer)
A. John Hillsamer, Chief
Lands & Minerals Operations
(Title)
June 2, 1976
(Date)

FORT CHURCHILL-CLAN ALPINE
SPECIAL STIPULATIONS

The Lessee shall comply with the following special conditions and stipulations unless they are modified by mutual agreement of the Lessee, the Supervisor and the Authorized Officer:

1. Surface occupancy within 500 feet (horizontal measurement) of any canal, ditch, slough, pond, lake, spring, or open body of water may be restricted or denied where deemed necessary by the appropriate surface management agency to protect wildlife and other resources. Other buffer zones and areas of restricted surface occupancy may be required to protect other resource values, including but not limited to, critical or rare or endangered species habitat.

2. The certified statement required by Section 18 of the lease form must be completed by a qualified archaeologist, acceptable to the Authorized Officer.

3. The use of wide or balloon-tired vehicles and/or helicopters may be required for any activities in off-road areas where deemed necessary to protect the soil and other resources.

4. Springs and water developments on Federal lands may be used only with the prior written approval of the Authorized Officer.

165220

VERIFIED

OFFICIAL RECORDS
CHURCHILL COUNTY, NEVADA
RECORDED BY
Sunoco Energy Development Co.
'79 JUN 6 AM 9:44

INDEXED

STEVE [illegible]
COUNTY RECORDER
FEE 7.00 DEP

Record and Return to
TITLE RECORD DEPARTMENT
SUNOCO ENERGY DEVELOPMENT CO.
12700 Park Central Place - Suite 1500
Dallas, Texas 75251

END OF DOCUMENT

Form 3260-3
(August 2007)

UNITED STATES
DEPARTMENT OF THE INTERIOR
BUREAU OF LAND MANAGEMENT

FORM APPROVED
OMB NO. 1004-0132
Expires: July 31, 2010

GEOTHERMAL SUNDRY NOTICE

The Bureau of Land Management (BLM) requires this form or other BLM approved forms to be prepared and filed in triplicate with requisite attachments. The BLM must approve this permit prior to any lease operations.

6. Lease Serial No.
N-17282

7. Surface Manager: ☑ BLM ☐ FS ☐ Other

8. Unit Agreement Name
Proposed Coyote Canyon Unit

1a. Well Type: ☐ Production ☐ Injection ☐ Heat Exchange ☑ Observation ☐ Other

9. Well No.
76-14

10. Permit No.

1b. Well Status:
New

11. Field or Area
Dixie Valley

2. Name of Lessee/Operator
TGP Dixie Development Company, LLC

12. Sec., T., R., B. & M.
S. 14, T24N, R36E MDM

3. Address of Lessee/Operator
9590 Prototype Court, Suite 200, Reno NV 89521

13. County
Churchill

4. Location of Well or Facility
778' W and 1586' N of the SE corner of Section 14 (UTM NAD83 N4422059m, E 423819m)

14. State
NV

5. Type of Work
- ☑ Change Plans
- ☐ Site and Road Construction
- ☐ Construct New Production Facilities
- ☐ Alter Existing Production Facilities
- ☐ Convert to Injection
- ☐ Fracture Test
- ☐ Shoot or Acidize
- ☐ Repair Well
- ☐ Pull or Alter Casing
- ☐ Multiple Complete
- ☐ Abandon
- ☐ Other

15. Describe Proposed Operations *(Use this space for well activities only. See instructions for current well conditions on page 2.)*

See Attached Procedure to cement back and side track well.

16. Describe Proposed Operations *(Use this space for activities other than well work.)*

17. I hereby certify that the foregoing is true and correct.

Signed Missy Miller Title Sr. Compliance Coordinator Date 10/01/2010

(This space for Federal use)

Approved by Teresa J. Knutson Title Stillwater Field Mgr. Date 10/18/2010

Conditions of Approval, if any:

Title 18 U.S.C. Section 1001 and Title 43 U.S.C. Section 1212 make it a crime for any person knowingly and willfully to make to any department or agency of the United States any false, fictitious or fraudulent statements or representations as to any matter within its jurisdiction.

(Continued on page 2)

REC'D - BLM - NSO
9:00 A.M. FEB 2 6 2010

Form 3200-24a
(September 2008)

UNITED STATES
DEPARTMENT OF THE INTERIOR
BUREAU OF LAND MANAGEMENT

OFFER TO LEASE AND LEASE FOR GEOTHERMAL RESOURCES
(For New Leases Issued Under the Energy Policy Act of 2005 [August 5, 2005])

Serial No. N-17282

The undersigned (see page 2) offers to lease all or any of the lands in item 2 that are available for lease pursuant to the Geothermal Steam Act of 1970, as amended (30 U.S.C. 1001-1025).

READ INSTRUCTIONS BEFORE COMPLETING

1. Name	1a. Street	
Dixie Valley Power	9590 Prototype Court, Suite 200	
1b. City	1c. State	1d. Zip Code
Reno	NV	89521

2. Surface managing agency if other than BLM: _____ Unit/Project: _____

Legal description of land requested (segregate by public domain and acquired lands): Enter T., R., Meridian, State and County

Total Acres Applied for _____

Percent U.S. interest _____

Amount remitted: Processing Fee $ _____ Rental Fee $ _____ Total $ _____

DO NOT WRITE BELOW THIS LINE

3. Land included in lease: Enter T., R., Meridian, State and County

T. 24 N., R. 36 E., MDM NEVADA Churchill County
sec. 11, ALL;
sec. 14, ALL;
sec. 15, ALL;
sec. 23, ALL.

Total Acres in Lease 2560.00

Rental Retained $ _____

In accordance with the above offer, or the previously submitted competitive bid, this lease is issued granting the exclusive right to drill for, extract, produce, remove, utilize, sell, and dispose of all the geothermal resources in the lands described in Item 3 together with the right to build and maintain necessary improvements thereupon, for a primary term of 10 years and subsequent extensions thereof in accordance with 43 CFR subpart 3207. Rights granted are subject to: applicable laws; the terms, conditions, and attached stipulations of this lease; the Secretary of the Interior's regulations and formal orders in effect as of lease issuance; and, when not inconsistent with the provisions of this lease, regulations and formal orders hereafter promulgated.

Type of Lease:
- [x] Competitive
- [ ] Noncompetitive
- [ ] Noncompetitive direct use (43 CFR subpart 3205)

Comments:
Per 43 CFR 3200.7(a)(2)
Conversion of all lease terms including royalty provisions.

THE UNITED STATES OF AMERICA

BY _____ (Signing Official)

ATANDA CLARK (Printed Name)

Chief, Branch of Minerals Adjudication (Title) MAR - 1 2010 (Date)

EFFECTIVE DATE OF LEASE 11/01/1977

Check if this is a converted lease [x]

EFFECTIVE DATE OF LEASE CONVERSION 12/01/2008

(Continued on page 2)

4. (a) The undersigned certifies that:
(1) The offeror is a citizen of the United States; an association of such citizens; a municipality; or a corporation organized under the laws of the United States, any State or the District of Columbia; (2) All parties holding an interest in the offer are in compliance with 43 CFR part 3200 and the authorizing Act; (3) The offeror's chargeable interests, direct and indirect, do not exceed those allowed under the Act; and (4) The offeror is not considered a minor under the laws of the State in which the lands covered by this offer are located.
(b) The undersigned agrees that signing this offer constitutes acceptance of this lease, including all terms, conditions and stipulations of which the offeror has been given notice. The offeror further agrees that this offer cannot be withdrawn, either in whole or part, unless the withdrawal is received by the proper BLM State Office before this lease, an amendment to this lease, or a separate lease, whichever covers the land described in the withdrawal, has been signed on behalf of the United States.

This offer will be rejected and will afford the offeror no priority if it is not properly completed and executed in accordance with the regulations or if it is not accompanied by the required payments. Title 18 U.S.C. § 1001 makes it a crime for any person knowingly and willfully to make to any Department or agency of the United States any false, fictitious, or fraudulent statements or representations as to any matter within its jurisdiction.

Duly executed this 24th day of February, 2010 Vincent J. Signorotti (Printed Name of Lessee or Attorney-in-fact) (Signature of Lessee or Attorney-in-fact)

LEASE TERMS

Sec. 1. Rentals—Rentals must be paid to the proper office of the lessor in advance of each lease year. Annual rental rates per acre or fraction thereof, as applicable, are:
(a) Noncompetitive lease (includes post-sale parcels not receiving bids, a direct use lease or a lease issued to a mining claimant): $1.00 for the first 10 years; thereafter $5.00; or
(b) Competitive lease: $2.00 for the first year; $3.00 for the second through tenth year; thereafter $5.00.
Annual rental is always due by the anniversary date of this lease (43 CFR 3211.13), regardless of whether the lease is in a unit or outside of a unit, the lease is in production or not, or royalties or direct use fees apply to the production.
Rental may only be credited toward royalty under 43 CFR 3211.15 and 30 CFR 218.303. Rental may not be credited against direct use fees. Failure to pay annual rental timely will result in late fees and will make the lease subject to termination in accordance with 43 CFR 3213.14.

Sec. 2. (a) Royalties—Royalties must be paid to the proper office of the lessor. Royalties are due on the last day of the month following the month of production. Royalties will be computed in accordance with applicable regulations and orders. Royalty rates for geothermal resources produced for the commercial generation of electricity but not sold in an arm's length transaction are: 1.75 percent for the first 10 years of production and 3.5 percent after the first 10 years. The royalty rate is to be applied to the gross proceeds derived from the sale of electricity in accordance with 30 CFR part 206 subpart H.
The royalty rate for byproducts derived from geothermal resource production that are minerals specified in section 1 of the Mineral Leasing Act (MLA), as amended (30 U.S.C. 181), is 5 percent, except for sodium compounds, produced between September 29, 2006 and September 29, 2011 (Pub. L. No. 109-338, §102; note to 30 U.S.C. 362) for which the royalty rate is 2 percent. No royalty is due on byproducts that are not specified in 30 U.S.C. § 181. (43 CFR 3211.19.)
If this lease or a portion thereof is committed to an approved communitization or unit agreement and the agreement contains a provision for allocation of production, royalties must be paid on the production allocated to this lease.
(b) Arm's length transactions—The royalty rate for geothermal resources sold by you or your affiliate at arm's length to a purchaser is 10 percent of the gross proceeds derived from the arm's-length sale (43 CFR 3211.17, 3211.18).
(c) Advanced royalties—In the absence of a suspension, if you cease production for more than one calendar month on a lease that is subject to royalties and that has achieved commercial production, your lease will remain in effect only if you make advanced royalty payments in accordance with 43 CFR 3212.15(a) and 30 CFR 218.305.
(d) Direct use fees—Direct use fees must be paid in lieu of royalties for geothermal resources that are utilized for commercial, residential, agricultural, or other energy needs other than the commercial production or generation of electricity, but not sold in an arm's length transaction (43 CFR 3211.18; 30 CFR 206.356). This requirement applies to any direct use of federal geothermal resources (unless the resource is exempted as described in 30 CFR 202.351(b) or the lessee is covered by paragraph (e), below) and is not limited to direct use leases. Direct use fees are due on the last day of the month following the month of production.
(e) If the lessee is a State, tribal, or local government covered by 43 CFR 3211.18(a)(3) and 30 CFR 206.366, check here: ☐. A lessee under this paragraph is not subject to paragraph (d), above. In lieu of royalties, the lessee under this paragraph must pay a nominal fee of
$ _____.

Sec. 3. Bonds—A bond must be filed and maintained for lease operations as required by applicable regulations.

Sec. 4. Work requirements, rate of development, unitization, and drainage--Lessee must perform work requirements in accordance with applicable regulations (43 CFR 3207.11, 3207.12), and must prevent unnecessary damage to, loss of, or waste of leased resources. Lessor reserves the right to specify rates of development and production and to require lessee to commit to a communitization or unit agreement, within 30 days of notice, if in the public interest. Lessee must drill and produce wells necessary to protect leased lands from drainage or pay compensatory royalty for drainage in the amount determined by lessor. Lessor will exempt lessee from work requirements only where the lease overlies a mining claim that has an approved plan of operations and where BLM determines that the development of the geothermal resource on the lease would interfere with the mining operation (43 CFR 3207.13).

Sec. 5. Documents, evidence, and inspection—Lessee must file with the proper office of the lessor, not later than (30) days after the effective date thereof, any contract or evidence of other arrangement for the sale, use, or disposal of geothermal resources, byproducts produced, or for the sale of electricity generated using geothermal resources produced from the lease. At such times and in such form as lessor may prescribe, lessee must furnish detailed statements and all documents showing (a) amounts and quality of all geothermal resources produced and used (either for commercial production or generation of electricity, or in a direct use operation) or sold; (b) proceeds derived therefrom or from the sale of electricity generated using such resources; (c) amounts that are unavoidably lost or reinjected before use, used to generate plant parasitic electricity (as defined in 30 CFR 206.351) or electricity for lease operations, or otherwise used for lease operations related to the commercial production or generation of electricity; and (d) amounts and quality of all byproducts produced and proceeds derived from the sale or disposition thereof. Lessee may be required to provide plats and schematic diagrams showing development work and improvements, and reports with respect to parties in interest.
In a format and manner approved by lessor, lessee must: keep a daily drilling record, a log, and complete information on well surveys and tests; keep a record of subsurface investigations; and furnish copies to lessor when required.

Lessee must keep open at all reasonable times for inspection by any authorized officer of lessor, the leased premises and all wells, improvements, machinery, and fixtures thereon, and all books, accounts, maps, and records relative to operations, surveys, or investigations on or in the leased lands. Lessee must maintain copies of all contracts, sales agreements, accounting records, billing records, invoices, gross proceeds and payment data regarding the sale, disposition, or use of geothermal resources, byproducts produced, and the sale of electricity generated using resources produced from the lease, and all other information relevant to determining royalties or direct use fees. All such records must be maintained in lessee's accounting offices for future audit by lessor and produced upon request by lessor or lessor's authorized representative or agent. Lessee must maintain required records for 6 years after they are generated or, if an audit or investigation is underway, until released of the obligation to maintain such records by lessor.

Sec. 6. Conduct of operations—Lessee must conduct operations in a manner that minimizes adverse impacts to the land, air, and water, to cultural, biological, visual, and other resources, and to other land uses or users. Lessee must take reasonable measures deemed necessary by lessor to accomplish the intent of this section. To the extent consistent with leased rights granted, such measures may include, but are not limited to, modification to siting or design of facilities, timing of operations, and specification of interim and final reclamation measures. Lessor reserves the right to continue existing uses and to authorize future uses upon or in the leased lands, including the approval of easements or rights-of-way. Such uses will be conditioned so as to prevent unnecessary or unreasonable interference with rights of lessee. Prior to disturbing the surface of the leased lands, lessee must contact lessor to be apprised of procedures to be followed and modifications or reclamation measures that may be necessary. Areas to be disturbed may require inventories or special studies to determine the extent of impacts to other resources. Lessor may require lessee to complete minor inventories or short term special studies under guidelines provided by lessor. If, in the conduct of operations, threatened or endangered species, objects of historic or scientific interest, or substantial unanticipated environmental effects are observed, lessee must immediately contact lessor. Lessee must cease any operations that are likely to affect or take such species, or result in the modification, damage or destruction of such habitats or objects.

Sec. 7. Production of byproducts—If the production, use, or conversion of geothermal resources from these leased lands is susceptible of producing a valuable byproduct or byproducts, including commercially demineralized water for beneficial uses in accordance with applicable State water laws, lessor may require substantial beneficial production or use thereof by lessee.

Sec. 8. Damages to property—Lessee must pay lessor for damage to lessor's improvements, and must save and hold lessor harmless from all claims for damage or harm to persons or property as a result of lease operations.

Sec. 9. Protection of diverse interests and equal opportunity—Lessee must maintain a safe working environment in accordance with applicable regulations and standard industry practices, and take measures necessary to protect public health and safety. Lessor reserves the right to ensure that production is sold at reasonable prices and to prevent monopoly. Lessee must comply with Executive Order No. 11246 of September 24, 1965, as amended, and regulations and relevant orders of the Secretary of Labor issued pursuant thereto. Neither lessee nor lessee's subcontractor may maintain segregated facilities.

Sec. 10. Transfer of lease interests and relinquishment of lease—As required by regulations, lessee must file with lessor any assignment or other transfer of an interest in this lease. Subject to the requirements of 43 CFR subpart 3213, lessee may relinquish this lease or any legal subdivision by filing in the proper office a written relinquishment, which will be effective as of the date BLM receives it, subject to the continued obligation of the lessee and surety to be responsible for: paying all accrued rentals and royalties; plugging and abandoning all wells on the relinquished land; restoring and reclaiming the surface and other resources; and complying with 43 CFR 3200.4.

Sec. 11. Delivery of premises—At such time as all or portions of this lease are returned to lessor, lessee must place all wells in condition for suspension or abandonment, reclaim the land as specified by lessor, and within a reasonable period of time, remove equipment and improvements not deemed necessary by lessor for preservation of producible wells or continued protection of the environment.

Sec. 12. Proceedings in case of default—If lessee fails to comply with any provisions of this lease or other applicable requirements under 43 CFR 3200.4, and the noncompliance continues for 30 days after written notice thereof, this lease will be subject to termination in accordance with the Act and 43 CFR 3213. This provision will not be construed to prevent the exercise by lessor of any other legal and equitable remedy or action, including waiver of the default. Any such remedy, waiver, or action will not prevent later termination for the same default occurring at any other time. Whenever the lessee fails to comply in a timely manner with any of the provisions of the Act, this lease, the regulations, or other applicable requirements under 43 CFR 3200.4, and immediate action is required, the lessor may enter on the leased lands and take measures deemed necessary to correct the failure at the lessee's expense.

Sec. 13. Heirs and successors-in-interest—Each obligation of this lease will extend to and be binding upon, and every benefit hereof will inure to, the heirs, executors, administrators, successors, or assigns of the respective parties hereto.

(Continued on page 3)

INSTRUCTIONS

A. General

1. Items 1 and 2 need to be completed only by parties filing for a noncompetitive lease. The BLM will complete the front of the form for other types of leases. The BLM may use the "Comments" space under Item 3 to identify when: the lessee has elected to make all lease terms subject to the Energy Policy Act of 2005 under 43 CFR 3200.7(a)(2) or 43 CFR 3200.8(b) (box labeled "converted lease" must also be checked); the lease is being issued noncompetitively to a party who holds a mining claim on the same lands as is covered by the lease under 43 CFR 3204.12; the lease is a direct use lease issued to a State, local, or tribal government (box at section 2(e) under Lease Terms must also be checked); the lease is a competitive lease with direct-use-only stipulations attached; or other special circumstances exist. A lessee who seeks to convert only the royalty rate of a lease under 43 CFR 3212.25 or who qualifies for a case-by-case royalty rate determination under 43 CFR 3211.17(b)(1)(i) should not use this form, but should instead use an addendum to the existing lease.

2. Entries must be typed or printed plainly in ink. The offeror must sign the form (Item 4) in ink.

3. An original and two copies of this offer must be prepared and filed in the proper BLM State Office. See regulations at 43 CFR 1821.10 for office locations.

4. If more space is needed, additional sheets must be attached to each copy of the form submitted.

B. Specific

Item 1—Enter the offeror's name and billing address.

Item 2—Indicate the agency managing the surface use of the land and the name of the unit or project of which the land is a part. The offeror may also provide other information that will assist in establishing status of the lands. The description of land must conform to 43 CFR 3203.10. Total acres applied for must not exceed that allowed by regulations (43 CFR 3203.10; 43 CFR 3206.12).

Payments: For noncompetitive leases, the amount remitted must include the processing fee for noncompetitive lease applications (43 CFR 3204.10; 43 CFR 3000.12) and the first year's rental at the rate of $1 per acre or fraction thereof. If the United States owns only a fractional interest in the geothermal resources, you must pay a prorated rental under 43 CFR 3211.11(d). The BLM will retain the processing fee even if the offer is completely rejected or withdrawn. To maintain the offeror's priority, the offeror must submit rental sufficient to cover all the land requested. If the land requested includes lots or irregular quarter-quarter sections, the exact acreage of which is not known to the offeror, rental should be submitted on the assumption that each such lot or quarter-quarter section contains 40 acres. If the offer is withdrawn or rejected in whole or in part before a lease issues, the BLM will return the rental remitted for the parts withdrawn or rejected.

The BLM will fill in the processing fee for competitive lease applications (43 CFR 3203.17; 43 CFR 3000.12) and the first year's rental at the rate of $2 per acre or fraction thereof.

Item 3—The BLM will complete this space.

NOTICES

The Privacy Act of 1974 and the regulation at 43 CFR 2.48(d) provide that you be furnished with the following information in connection with information required by this geothermal lease application.
AUTHORITY: 30 U.S.C. 1000 et seq.
PRINCIPAL PURPOSE—The information is to be used to process geothermal lease applications.
ROUTINE USES: (1) The adjudication of the lessee's rights to the land or resources. (2) Documentation for public information in support of notations made on land status records for the management, disposal, and use of public lands and resources. (3) Transfer to appropriate Federal agencies when concurrence is required prior to granting uses or rights in public lands or resources. (4) Transfer to the appropriate Federal, State, local, or foreign agencies, when relevant to civil, criminal, or regulatory investigations or prosecutions.

FORT CHURCHILL-CLAN ALPINE
SPECIAL STIPULATIONS

The Lessee shall comply with the following special conditions and stipulations unless they are modified by mutual agreement of the Lessee, the Supervisor and the Authorized Officer:

1. Surface occupancy within 500 feet (horizontal measurement) of any canal, ditch, slough, pond, lake, spring, or open body of water may be restricted or denied where deemed necessary by the appropriate surface management agency to protect wildlife and other resources. Other buffer zones and areas of restricted surface occupancy may be required to protect other resource values, including but not limited to, critical or rare or endangered species habitat.

2. The certified statement required by Section 18 of the lease form must be completed by a qualified archaeologist, acceptable to the Authorized Officer.

3. The use of wide or balloon-tired vehicles and/or helicopters may be required for any activities in off-road areas where deemed necessary to protect the soil and other resources.

4. Springs and water developments on Federal lands may be used only with the prior written approval of the Authorized Officer.

Form 3260-3
(September 1993)

UNITED STATES
DEPARTMENT OF THE INTERIOR
BUREAU OF LAND MANAGEMENT

FORM APPROVED
OMB NO. 1004-0132
Expires: July 31, 1996

GEOTHERMAL SUNDRY NOTICE

The Bureau of Land Management (BLM) requests this Form or other BLM-approved forms to be prepared and filed in **triplicate** with requisite attachments with the authorized officer. The authorized officer must approve this permit prior to any lease operations.

6. Lease Serial No. *N-17283A*

7. Surface Manager X BLM ___ FS ___ Other

8. Unit Agreement Name *Coyote Canyon proposed unit*

1a. Well Type: ___ Production ___ Injection ___ Heat Exchange X Observation ___ Other

1b. Well Status: *Observation well*

9. Well No. *58-22*

10. Permit No.

2. Name of Lessee/Operator *TGP Dixie Development Company, LLC*

11. Field or Area *Dixie Valley*

3. Address of Lessee/Operator *9590 Prototype Ct, Suite 200*
Reno, NV 89521-5916
(775) 850-2266

12. Sec., T., R., B. & M *Sec. 22, T24N, R36E, MDB&M*

13. County *Churchill*

4. Location of Well or Facility
166m North, 705m West of SE corner Section 22 (UTM NAD83 N 4420163m, E 421687m)

14. State *Nevada*

5. Type of Work
X Change Plans
___ Site and Road Construction
___ Construct New Production Facilities
___ Alter Existing Production Facilities
___ Convert to Injection
___ Fracture Test
___ Shoot or Acidize
___ Repair Well
___ Pull or Alter Casing
___ Multiple Complete
___ Abandon
___ Other

15. Describe Proposed Operations *(Use this space for well activities only. See instructions for current well conditions on reverse.)*

Revise Drilling Program as shown on attached red-lined version.
Changes include the following:
Clarification of road improvements as recommended by BLM
Well Pad increase from 100' x 100' to 150' x 150' with turn around
Surface casing increase from 3" to 4-1/2" and depth set increased to 4500'
Staged core rod sizes from 3" to 2.38" instead of just using 3" core rod

16. Describe Proposed Operations *(Use this space for all activities other than well work)*

17. I hereby certify that the foregoing is true and correct

Signed *Missy Miller* Missy Miller Title *Sr. Compliance Coordinator* Date *April 1, 2011*

(This space for Federal use)

Approved by Carla Juarez Acting Title Stillwater Field Manager Date 4-5-2011

Conditions of Approval, if any: COA's attached

Title 18 U.S.C Section 1001, makes it a crime for any person knowingly or willfully to make to any department or agency of the United States any false, fictitious or fraudulent statements or representations as to any matter within its jurisdiction.

April 2011
TGP Dixie Development Company, LLC, Coyote Canyon Geothermal Exploration Project

CONDITIONS OF APPROVAL (COAs)

Conditions remain the same as those provided for in the approved GDP.

58-22 Temperature Core Hole Modifications

Location Changes (see location and pad maps)

1. Pad size was increased from 100' X 100' to 150' X 150' plus a turnaround (see Map).
2. Access will be from the west on the Old County Road. The overland route south to the 46-22TGH location will be improved as a road according to BLM Gold Book Standards. New road from 46-22TGH location to the 58-22 pad will be constructed according to Gold Book Standards. (see Map). All routes will avoid drainages, vegetation and will include erosion control.
3. All bulk storage will have adequate secondary containment or diversion control.
4. Interim reclamation to begin as soon as possible following completion of the well program and will include partial pad and road reclamation as defined in the BLM Gold Book and TGP's Coyote Canyon Environmental Assessment document (DOI-BLM-NV-C010-2010-0010-EA, 2.1.9.1).
5. Final reclamation will occur following plugging and abandoning the well per Gold Book Standards and the Coyote Canyon EA.

Changes in drilling program (see well schematic)

1. Rotary portion of the well will extend to 4,500' instead of 3,500' (expected base of the alluvium).
2. Triple-Combo electric logs will be run in every open hole section.
3. HRQ core will be drilled (3.7825" hole) to 7,000', NRQ core (3.03" hole) to 9,500'.
4. Rotary and core drilling will be mud logged with samples provided per regulations.
5. Casing and cement programs updated as follows:

   Casing Requirements

   • 50' of 9 5/8" (40# K-55 BUTT) Casing (Collapse Resistance 2570 psi, Internal yield pressure 3950 psi, Body yield strength 630,000#)

   • 950' of 7" (23# K-55 BUTT) Casing (Collapse Resistance 4960 psi, internal yield pressure 5350 psi, Body yield strength 152,000#)

   • 4,500' of 4 1/2" (10.5# K-55 BUTT) Casing (Collapse Resistance 4,010 psi, internal yield pressure 4,790 psi, Body yield strength 165,000#)

   • 7000' of HRQ core rod (Collapse 8,770 psi, Internal yield 6,560 psi)

   • 9,500' of NRQ core rod (Collapse 15,300 psi, internal yield 15,000 psi)

Cement Calculations and Data

Conductor to 50': 9 5/8" OD, 8.835" ID
3.2 bbls of Ready mix to surface

Surface Casing to 950': 7" OD, 6.366" ID
43 bbls (includes 100% excess for the open hole)
35.8 bbls displacement

Intermediate Casing to 4500': 4 1/2" OD, 4.052" ID
128.6 bbls (includes 100% excess for the open hole)
70 bbls displacement

HRQ Rods with bottom 1000' cemented from 7000' back to 6000' (As necessary if changing to NRQ Hole size) 3.5" OD and 3.06 ID.
4 bbls cement (includes 100% excess)
19 bbls displacement

Cement Blend

35% Silica Flour, .75% CFR-115, 2% Cenolite
.03 gal/sx CR-180 (depending on temperature)
Slurry wt = 14.75 ppg
Slurry Yield = 1.34 ft3

TGP Dixie Development Company, LLC
Coyote Canyon Proposed Unit
58-22 Temperature Core Hole Location
Churchill County, Nevada

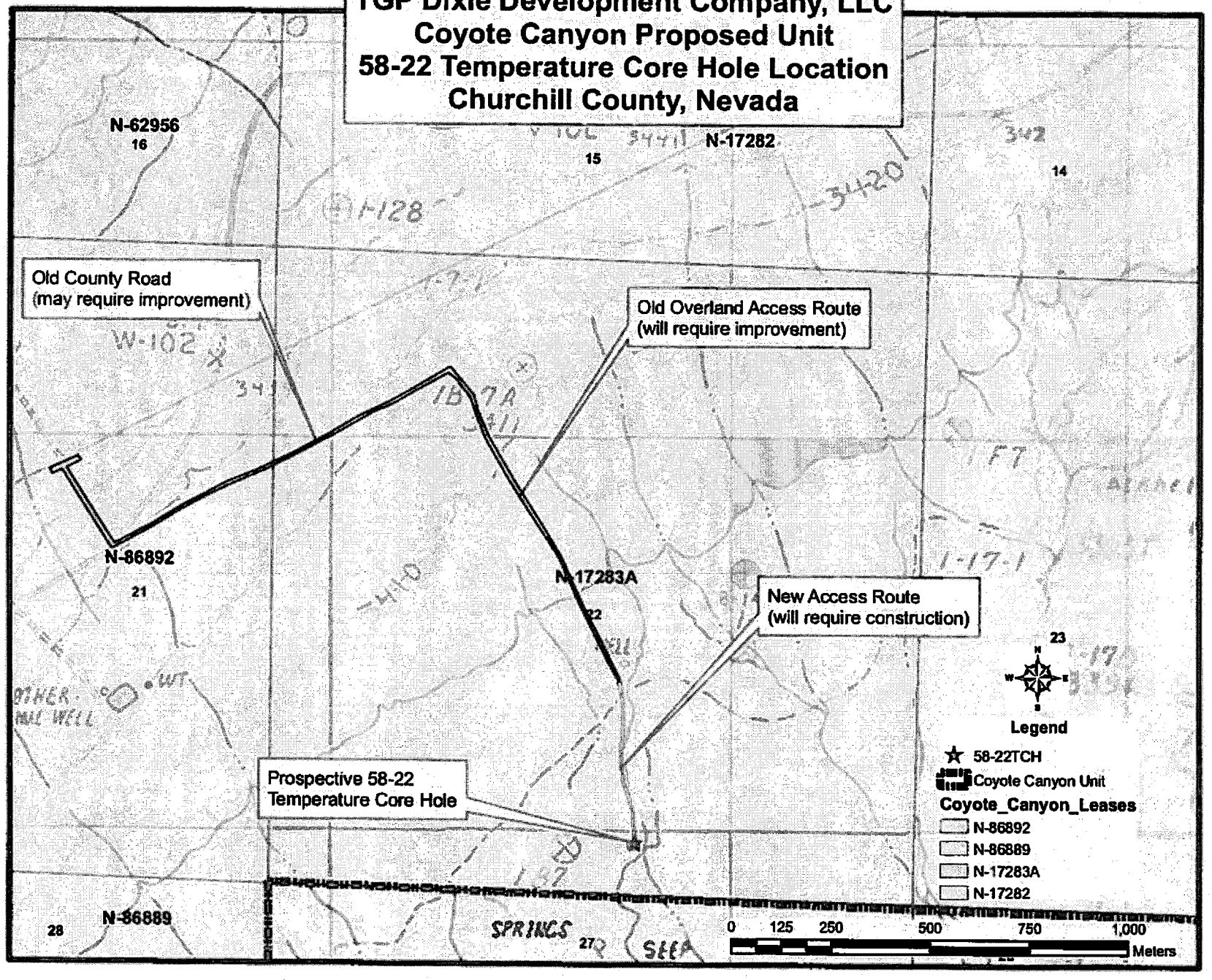

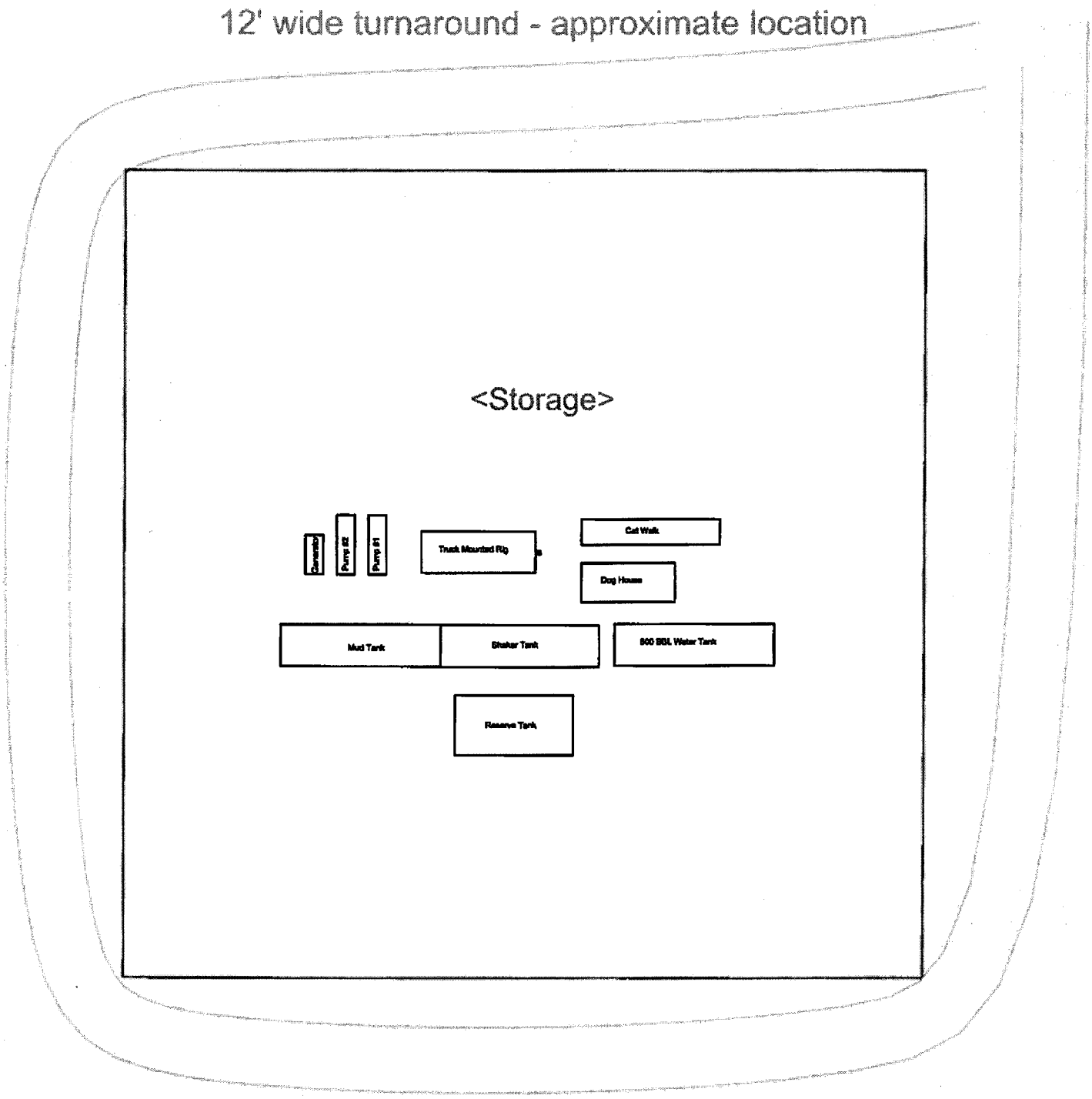

Coyote Canyon Unit 58-22 TCH
Schram TX-130/ BL 230 Rig Layout
Pad Size 150' X 150'

Components not to scale

TGP Dixie Development Company, LLC
CORE HOLE
PROPOSED WELL COMPLETION
WITH BOPE

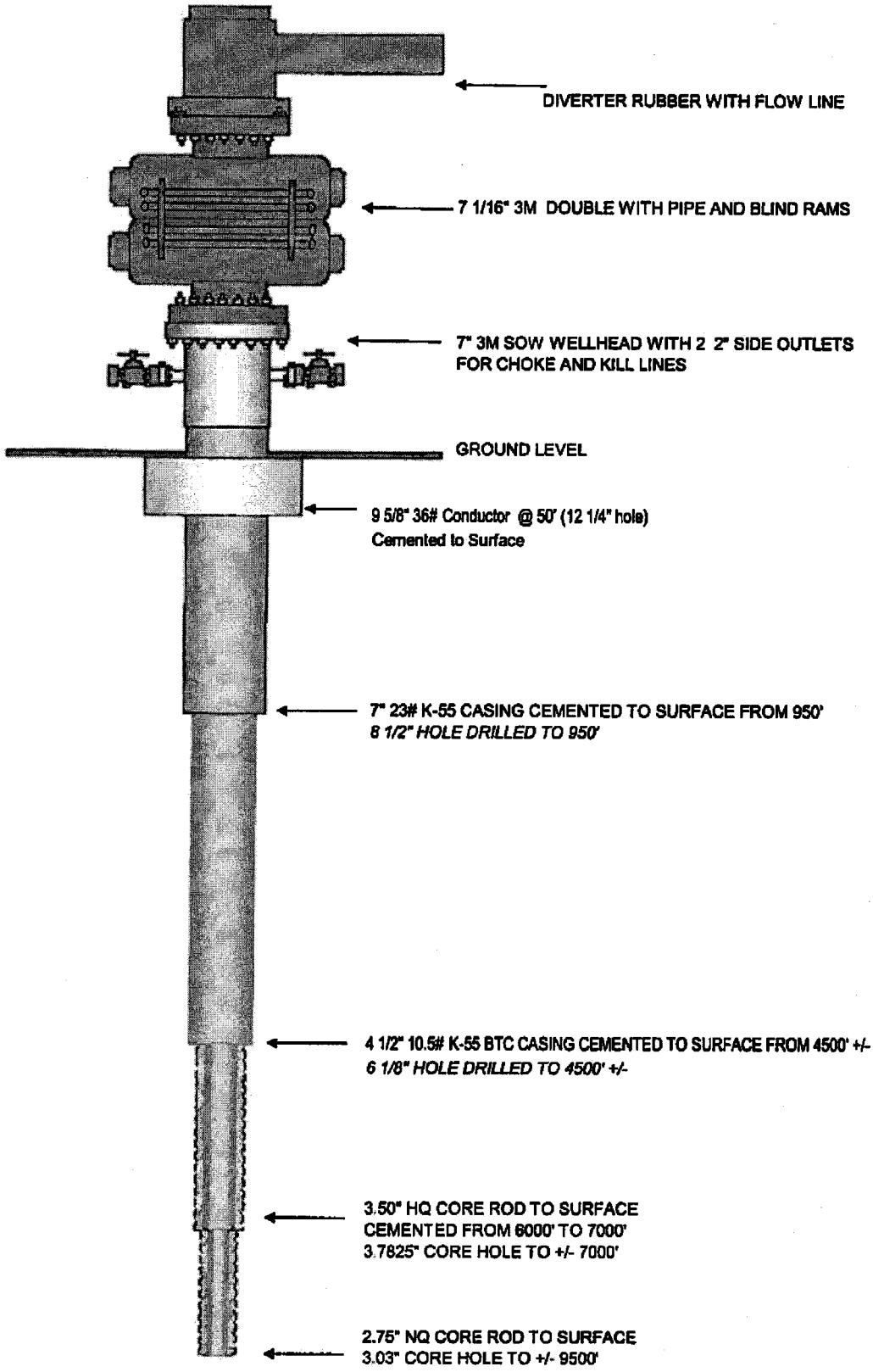

United States Department of the Interior
BUREAU OF LAND MANAGEMENT
Nevada State Office
P.O. Box 12000 (1340 Financial Blvd.)
Reno, Nevada 89520-0006
http://www.nv.blm.gov

TAKE PRIDE IN AMERICA

SEP 1 2 2007

In Reply Refer To:
N-43282X et al
3280/3282
3210/3220
NV923.d

CERTIFIED MAIL - RETURN RECEIPT REQUESTED
7005 2570 0001 8534 6261

DECISION

Caithness Dixie Valley, LLC	:	
9590 Prototype Ct., Suite 200	:	Geothermal
Reno, NV 89521	:	

Unit and Participating Area Boundaries Expanded
Leases Consolidated Segregated and Expired

The geothermal leases listed below have been partially committed to the following Unit Agreement (UA) and or Participating Area (PA):

Dixie Valley Unit Agreement and Participating Area, N-43282X, N-4328201
(Unit Name)

May 1, 2007	Caithness Dixie Valley, LLC
(Commitment Date)	(Operator)

Departmental regulations 43 CFR 3210.10(1) provide for the segregation of leases committed in part to a unit agreement. Due to the unit expansion, the unitized lands are retained in the original lease; the non-unitized lands are segregated and assigned new serial numbers. The terms of leases included in the expansion of the UA are extended until such time as the subject unit terminates or if the lands are eliminated from the unit agreement (43 CFR 3208.10(4)). The anniversary date for all leases remains unchanged. Rental will be due on the next anniversary date of each lease located within the unit but outside of the PA. Leases or portions of leases within the PA will be subject to royalties. After expansion, lease N-17282 is totally within the Dixie Valley UA. The segregated leases expired on their own terms effective June 30, 2007. The descriptions of the base leases and the segregated leases are as follows:

N-17283A (unitized lands)
T. 24 N., R. 36 E., MDM, Nevada
sec. 22, all.

Containing 640.00 acres

N-84040 (nonunitized lands)
T. 24 N., R. 36 E., MDM, Nevada
sec. 20, E2;
sec. 21, all.
Containing 960.00 acres
Expired June 30, 2007

Form 3000-3
(June 1988)

UNITED STATES
DEPARTMENT OF THE INTERIOR
BUREAU OF LAND MANAGEMENT

FORM APPROVED
OMB NO. 1004-0034
Expires: August 31, 1989

RECEIVED
JUL 2 1991
OXBOW GEOTHERMAL CORP

ASSIGNMENT OF RECORD TITLE INTEREST IN A LEASE FOR OIL AND GAS OR GEOTHERMAL RESOURCES

Mineral Leasing Act of 1920 (30 U.S.C. 181 et seq.)
Act for Acquired Lands of 1947 (30 U.S.C. 351-359)
Geothermal Steam Act of 1970 (30 U.S.C. 1001-1025)
Department of the Interior Appropriations Act, Fiscal Year 1981 (42 U.S.C. 6508)

Lease Serial No. N-17283-A

Lease Effective Date (Anniversary Date) November 1, 1977

New Serial No.

Type or print plainly in ink and sign in ink.

PART A: ASSIGNMENT

1. Assignee* Oxbow Geothermal Corporation
Street 200 South Virginia Street, Suite 450
City, State, ZIP Code Reno, NV 89501

*If more than one assignee, check here ☐ and list the name(s) and address(es) of all additional assignees on the reverse of this form or on a separate attached sheet of paper.

This record title assignment is for: *(Check one)* ☐ Oil and Gas Lease, or ☒ Geothermal Lease

Interest conveyed: *(Check one or both, as appropriate)* ☒ Record Title, ☐ Overriding Royalty, payment out of production or other similar interests or payments

2. This assignment conveys the following interest:

Land Description	Percent of Interest			Percent of Overriding Royalty or Similar Interests	
Additional space on reverse, if needed. Do not submit documents or agreements other than this form; such documents or agreements shall only be referenced herein.	Owned	Conveyed	Retained	Reserved	Previously reserved or conveyed
a	b	c	d	e	f
Churchill County, Nevada Township 24 North, Range 36 East, MDM Section 20: E/2 Section 21: All Section 22: All Containing 1600.00 acres m/l	50%	50%	-0-	-0-	-0-

FOR BLM USE ONLY—DO NOT WRITE BELOW THIS LINE

UNITED STATES OF AMERICA

This assignment is approved solely for administrative purposes. Approval does not warrant that either party to this assignment holds legal or equitable title to this lease.

☒ Assignment approved for above described lands;

☐ Assignment approved for attached land description

Assignment approved effective JUL 1 1991

☐ Assignment approved for land description indicated on reverse of this form.

By Marla B. Bohl
Chief, Branch of Lands & Minerals Operations

JUL 24 1991

Part A (Continued): ADDITIONAL SPACE for Names and addresses of additional assignees in Item No. 1, if needed, or for Land Description in Item No. 2, if needed.

PART B: CERTIFICATION AND REQUEST FOR APPROVAL

1. The assignor certifies as owner of an interest in the above designated lease that he/she hereby assigns to the above assignee(s) the rights specified above.

( ) Assignee certifies as follows: (a) Assignee is a citizen of the United States; an association of such citizens; a municipality; or a corporation organized under the laws of the United States or of any State or territory thereof. For the assignment of NPR-A leases, assignee is a citizen, national, or resident alien of the United States or association of such citizens, nationals, resident aliens or private, public or municipal corporations, (b) Assignee is not considered a minor under the laws of the State in which the lands covered by this assignment are located; (c) Assignee's chargeable interests, direct and indirect, in either public domain or acquired lands, do not exceed 200,000 acres in oil and gas options or 246,080 in oil and gas leases in the same State, or 300,000 acres in leases and 200,000 acres in options in each leasing District in Alaska, if this is an oil and gas lease issued in accordance with the Mineral Leasing Act of 1920 or 51,200 acres in any one State if this is a geothermal lease; (d) All parties holding an interest in the assignment are otherwise in compliance with the regulations (43 CFR Group 3100 or 3200) and the authorizing Acts; (e) Assignee is in compliance with reclamation requirements for all Federal oil and gas lease holdings as required by sec. 17(g) of the Mineral Leasing Act; and (f) Assignee is not in violation of sec. 41 of the Mineral Leasing Act.

3. Assignee's signature to this assignment constitutes acceptance of all applicable terms, conditions, stipulations and restrictions pertaining to the lease described herein.

For geothermal assignments, an overriding royalty may not be less than one-fourth (¼) of one percent of the value of output, nor greater than 50 percent of the rate of royalty due to the United States when this assignment is added to all previously created overriding royalties (43 CFR 3241).

I certify that the statements made herein by me are true, complete, and correct to the best of my knowledge and belief and are made in good faith.

Executed this 24th day of May, 19 91

Executed this _____ day of _____, 19

Name of Assignor as shown on current lease T.G.S. Associates - undivided 50% Interest

Please type or print

Assignor T.G.S. Associates

~~Attorney-in-fact~~ By: [signature] (Signature)

149 Broadway, Suite 612

(Assignor's Address)

Oakland, CA 94612

(City) (State) (Zip Code)

Assignee Oxbow Geothermal Corporation

~~Attorney-in-fact~~ By: [signature] (Signature)

Title 18 U.S.C. Sec. 1001 makes it a crime for any person knowingly and willfully to make to any Department or agency of the United States any false, fictitious or fraudulent statements or representations as to any matter within its jurisdiction.

GOVERNMENT PRINTING OFFICE: 1988—673-016/95011

IN REPLY REFER TO:

United States Department of the Interior

BUREAU OF LAND MANAGEMENT
NEVADA STATE OFFICE

850 Harvard Way
P.O. Box 12000
Reno, Nevada 89520

N-8488 et al
3210/3220
(NV-943.3)

DEC 30 1986

RECEIVED
DEC 31 1986
OXBOW GEOTHERMAL CORP

Certified Mail
Return Receipt Requested

DECISION

Oxbow Geothermal Corporation
200 South Virginia No. 450
Reno, NV 89501

: Geothermal Resources

LEASES EXTENDED

Washington Office Instruction Memorandum No. 85-63 provides policy for continuing geothermal leases committed to a unit containing a well capable of production committed to a bona fide sales contract.

The following geothermal leases committed to the Dixie Valley Unit meet the above criteria and are hereby extended for the duration of the unit.

Serial Number

N-8488	N-17283
N-8489	N-17283-A
N-8491	N-17284
N-8491-A	N-17285
N-14972	N-17286
N-14974	N-18398
N-14975	N-18399
N-14977	N-18400
N-14978	N-21454
N-14979	

If you have any questions, please call Joan Woodin at (702) 784-5703.

William K. Stowers

for Marla B. Bohl, Chief
Branch of Lands and Minerals Operations

Form 3200-17
(August 1982)

UNITED STATES
DEPARTMENT OF THE INTERIOR
BUREAU OF LAND MANAGEMENT

FORM APPROVED
OMB NO. 1004-0074
Expires: April 30, 1985

Serial No. N-17283A

New Serial No.

ASSIGNMENT AFFECTING RECORD TITLE TO GEOTHERMAL RESOURCES LEASE

PART I

Oxbow Geothermal Corporation
200 South Virginia St.
Suite 450
Reno, Nevada 89501

OXBOW - RENO, NV
FAX # (702) 322-1362
TELEPHONE # (702) 322-1300

TO:

FAX #

FROM:

DATE: PAGES:

The undersigned, as owner of 50% percent of record title of the above-designated geothermal resources lease issued effective *(date)* November 1, 1977, hereby transfers and assigns to the assignee shown above, the record title interest in and to such lease as specified below.

2. Describe the lands affected by this assignment *(43 CFR 3241.2-5)*

T24N R36E MDB&M
Section 20: E½
Section 21: All
Section 22: All
Containing 1600.00 acres in Churchill County, Nevada

3. What part of assignor(s) record title interest is being conveyed to assignee? *(Give percentage or share)* 100%

4. What part of the record title interest is being retained by assignor(s)? None

5a. What overriding royalty or production payments is the assignor reserving herein? *(See Item 4 of General Instructions; specify percentage; no assignment will be approved which does not comply with 43 CFR 3241.7-2 on limitation of overriding royalties)* None

b. What overriding royalties or production payments, if any, were previously reserved or conveyed? *(Percentage only)* See Exhibit A

It is agreed that the obligation to pay any overriding royalties or payments out of production of geothermal resources created herein, which, when added to overriding royalties or payments out of production previously created, aggregate in excess of 50 percent, of the rate of royalty due the United States, shall be suspended.

I CERTIFY That the statements made herein are true, complete, and correct to the best of my knowledge and belief and are made in good faith.

Executed this 19th day of August, 1986

Douglas R. Powell
(Assignor's Signature)
Vice President

Oxbow Geothermal Company
(Assignor's Address)
200 South Virginia St., Suite 450
Reno (City) Nevada (State) 89501 (Zip Code)

Title 18 U.S.C., Section 1001, makes it a crime for any person knowingly and willfully to make to any department or agency of the United States any false, fictitious, or fraudulent statements or representations as to any matter within its jurisdiction.

THE UNITED STATES OF AMERICA

Assignment approved as to the lands described below:

SAME AS ITEM 2

Assignment approved effective SEP 01 1986

By Marla B. Bohl
(Authorized Officer)

Chief, Branch of Lands & Minerals Operations
(Title)

SEP 16 1986
(Date)

NOTE: This form may be reproduced provided that copies are exact reproductions on one sheet of both sides of this official form in accordance with the provisions of 43 CFR 3241.2-4.

PART II

ASSIGNEE'S REQUEST FOR APPROVAL OF ASSIGNMENT

A. ASSIGNEE CERTIFIES THAT

1. Assignee is qualified to hold a geothermal resources lease under 43 CFR 3202.1
2. Assignee is ☐ Individual ☐ Municipality ☐ Association ☒ Corporation
3. Assignee is the sole party in interest in this assignment *(information as to interests of other parties in this assignment must be furnished as prescribed in Specific Instructions)*
4. Filing fee of $50 is attached *(See Item 2 of General Instructions)*
5. Assignee's interests, direct and indirect, in geothermal resources leases, do not exceed 20,480 chargeable acres *(43 CFR 3201.2)*

B. ASSIGNEE AGREES to be bound by the terms and provisions of the lease described here, provided the assignment is approved by the Authorized Officer.

C. IT IS HEREBY CERTIFIED That the statements made herein are true, complete, and correct to the best of undersigned's knowledge and belief and are made in good faith.

Executed this 19th day of August, 1986

Douglas R Powell
(Assignee's Signature)
Vice President

Oxbow Geothermal Corporation
200 South Virginia St., Suite 450
Reno, Nevada 89501
(Address, include zip code)

Title 18 U.S.C., Section 1001, makes it a crime for any person knowingly and willfully to make to any department or agency of the United States any false, fictitious, or fraudulent statements or representations as to any matter within its jurisdiction.

GENERAL INSTRUCTIONS

1. *Use of form* — Use only for assignment of record title interest in geothermal resources leases, *and for assignments of working or royalty interests, operating agreements, or subleases.* An assignment of record title may only cover lands in *one* lease. If more than one assignment is made out of a lease, file a separate instrument of transfer with *each* assignment.

2. *Filing and number of copies* — File three (3) completed and manually signed copies in proper BLM office. A $50 nonrefundable filing fee *must* accompany assignment. File assignment within ninety (90) days *after* date of final execution.

3. *Effective date of assignment* — Assignment, if approved, takes effect on the first day of the month following the date of filing of *all* required papers.

4. *Overriding royalties or payments out of production* — Describe in an accompanying statement any overriding royalties or payments out of production created by assignment but not set out therein. If payments out of production are reserved by assignor, outline in detail the amount, method of payment, and other pertinent terms.

5. *Effect of assignment* — Approval of assignment of a definitely described portion of the leased lands creates separate leases. Assignee, upon approval of assignment, becomes lessee of the Government as to the assigned interest and is responsible for complying with *all* lease terms and conditions, including timely payment of annual rental and maintenance of any required bond; *except* in the case of assignment of undivided interests, royalties, and operating agreements.

6. A copy of the executed lease, out of which this assignment is made, should be made available to assignee by assignor.

SPECIFIC INSTRUCTIONS

(Items not specified are self-explanatory)

PART I

Item 1 — Type or print plainly, in ink, between and below heavy dots, the assignee's full name and mailing address, including zip code.

PART II

A. *Certification of assignee*

3. If assignee is an association or partnership, assignee *must* furnish a certified copy of its articles of association or partnership, with a statement that (a) it is authorized to hold geothermal resources leases; (b) that the person executing the assignment is authorized to act on behalf of the organization in such matters; and (c) names and addresses of members controlling more than 10 percent interest.

If assignee is a corporation, it *must* submit a statement containing the following information: (a) State in which it was incorporated; (b) that it is authorized to hold geothermal resources leases; (c) that officer executing assignment is authorized to act on behalf of the corporation in such matters; and (d) percentage of voting stock and percentage of *all* stock owned by aliens or those having addresses outside the United States. If 10 percent or more of the stock of any class is owned or controlled by or on behalf of any one stockholder, a separate showing of his citizenship and holdings *must* be furnished.

If evidence of qualifications and ownership has previously been furnished as required by the above, reference by serial number of record in which it was filed together with a statement as to any amendments. Qualifications of assignee *must* be in full compliance with the regulations (43 CFR 3241.1–2).

4. *Statement of interests* — Assignee *must* indicate whether or not he is the sole party in interest in the assignment; if not, assignee *must* submit, at time assignment is filed, a signed statement giving the names of other interested parties. If there are other parties interested in the assignment, a separate statement *must* be signed by each assignee, giving the nature and extent of the interest of each, the nature of agreement between them, if oral; and a copy of agreement, if written. *All* interested parties *must* furnish evidence of their qualifications to hold such lease interests. Separate statements and written agreements, if any, *must* be filed with the filing of the assignment.

Paperwork Reduction Act of 1980 (44 U[illegible] 3501 et seq.) requires us to inform you tha[illegible] information is being collected in accor[illegible]ce with 43 CFR 3241. [illegible]formation will be used to identify and communicate with the parties involved. [illegible]se to this request is required to obtain a benefit.

STATE OF NEVADA)
)ss
COUNTY OF WASHOE)

On this 19th day of August, A.D. 1986, personally appeared before me, a notary public in and for Washoe County, Douglas R. Powell, known to me to be the person(s) whose name is subscribed to the within instrument.

Jane M. Bianucci
Notary Public

My commission expires:

November 12, 1989

JANE M. BIANUCCI
Notary Public - State of Nevada
Appointment Recorded in Washoe County
MY APPOINTMENT EXPIRES NOV. 12, 1989

Exhibit A

N-17283A

W.M. Hughes, et al., have reserved a 5% ORRI on geothermal steam, and a 2-1/2% ORRI on dissolved minerals. (Created in assignment of 26-1/2% interest in lease).

Southland Royalty Company has reserved a Net Operating Profit ("NOP") interest of 5% until Oxbow recovers $3,000,000.00 in gross profits; thereafter, NOP interest of 10% until Oxbow recovers $6,000,000.00 in gross profits; thereafter, NOP interest of 15% until Southland recovers $15,000,000.00.

Form 3200-17
(August 1982)

UNITED STATES
DEPARTMENT OF THE INTERIOR
BUREAU OF LAND MANAGEMENT

FORM APPROVED
OMB NO. 1004-0074
Expires: April 30, 1985

Serial No. N-17283-A

New Serial No.

ASSIGNMENT AFFECTING RECORD TITLE TO GEOTHERMAL RESOURCES LEASE

PART I

1. Oxbow Geothermal Corporation
200 South Virginia St. Suite 450
Reno, NV 89501

The undersigned, as owner of 50% percent of record title of the above-designated geothermal resources lease issued effective *(date)* November 1, 1977, hereby transfers and assigns to the assignee shown above, the record title interest in and to such lease as specified below.

2. Describe the lands affected by this assignment *(43 CFR 3241.2-5)*

Township 24N, Range 36E: MDM

Section 20: E/2
Section 21: All
Section 22: All

Containing 1,600.00 Acres, more or less, Churchill County, Nevada

3. What part of assignor(s) record title interest is being conveyed to assignee? *(Give percentage or share)* 100%

4. What part of the record title interest is being retained by assignor(s)? None

5a. What overriding royalty or production payments is the assignor reserving herein? *(See Item 4 of General Instructions; specify percentage; no assignment will be approved which does not comply with 43 CFR 3241.7-2 on limitation of overriding royalties)* Production Payment described on attached Exhibit "A"

b. What overriding royalties or production payments, if any, were previously reserved or conveyed? *(Percentage only)* See Exhibits "B" and "C" attached

It is agreed that the obligation to pay any overriding royalties or payments out of production of geothermal resources created herein, which, when added to overriding royalties or payments out of production previously created, aggregate in excess of 50 percent, of the rate of royalty due the United States, shall be suspended.

I CERTIFY That the statements made herein are true, complete, and correct to the best of my knowledge and belief and are made in good faith.

Executed this 12th day of August, 1985

TRANS-PACIFIC GEOTHERMAL INC.
Ari Meidav
(Assignor's Signature)

TRANS-PACIFIC GEOTHERMAL INC.
(Assignor's Address)

1419 Broadway Suite 415
Oakland, CA 94612
(City) (State) (Zip Code)

Title 18 U.S.C., Section 1001, makes it a crime for any person knowingly and willfully to make to any department or agency of the United States any false, fictitious, or fraudulent statements or representations as to any matter within its jurisdiction.

THE UNITED STATES OF AMERICA

Assignment approved as to the lands described below:

SAME AS ITEM 2

RECEIVED

Assignment approved effective OCT 01 1985

By Marla B. Bohl
(Authorized Officer)

Chief, Branch of Lands & Minerals Operations
(Title)

OCT 30 1985
(Date)

NOTE: This form may be reproduced provided that copies are exact reproductions on one sheet of both sides of this official form in accordance with the provisions of 43 CFR 3241.2-4.

PART II

ASSIGNEE'S REQUEST FOR APPROVAL OF ASSIGNMENT

A. ASSIGNEE CERTIFIES THAT

1. Assignee is qualified to hold a geothermal resources lease under 43 CFR 3202.1
2. Assignee is ☐ Individual ☐ Municipality ☐ Association ☒ Corporation
3. Assignee is the sole party in interest in this assignment *(information as to interests of other parties in this assignment must be furnished as prescribed in Specific Instructions)*
4. Filing fee of $50 is attached *(See Item 2 of General Instructions)*
5. Assignee's interests, direct and indirect, in geothermal resources leases, do not exceed 20,480 chargeable acres *(43 CFR 3201.2)*

B. ASSIGNEE AGREES to be bound by the terms and provisions of the lease described here, provided the assignment is approved by the Authorized Officer.

C. IT IS HEREBY CERTIFIED That the statements made herein are true, complete, and correct to the best of undersigned's knowledge and belief and are made in good faith.

Executed this 12th day of August, 1985

OXBOW GEOTHERMAL CORPORATION

(Assignee's Signature)

Michael Aquilina, Vice-Chairman
200 South Virginia St. Suite 450
Reno, NV 89501

(Address, include zip code)

Title 18 U.S.C., Section 1001, makes it a crime for any person knowingly and willfully to make to any department or agency of the United States any false, fictitious, or fraudulent statements or representations as to any matter within its jurisdiction.

GENERAL INSTRUCTIONS

1. *Use of form* – Use only for assignment of record title interest in geothermal resources leases, *and for assignments of working or royalty interests, operating agreements, or subleases.* An assignment of record title may only cover lands in *one* lease. If more than one assignment is made out of a lease, file a separate instrument of transfer with *each* assignment.

2. *Filing and number of copies* – File three (3) completed and manually signed copies in proper BLM office. A $50 nonrefundable filing fee *must* accompany assignment. File assignment within ninety (90) days *after* date of final execution.

3. *Effective date of assignment* – Assignment, if approved, takes effect on the first day of the month following the date of filing of *all* required papers.

4. *Overriding royalties or payments out of production* – Describe in an accompanying statement any overriding royalties or payments out of production created by assignment but not set out therein. If payments out of production are reserved by assignor, outline in detail the amount, method of payment, and other pertinent terms.

5. *Effect of assignment* – Approval of assignment of a definitely described portion of the leased lands creates separate leases. Assignee, upon approval of assignment, becomes lessee of the Government as to the assigned interest and is responsible for complying with *all* lease terms and conditions, including timely payment of annual rental and maintenance of any required bond; *except* in the case of assignment of undivided interests, royalties, and operating agreements.

6. A copy of the executed lease, out of which this assignment is made, should be made available to assignee by assignor.

SPECIFIC INSTRUCTIONS

(Items not specified are self-explanatory)

PART I

Item 1 – Type or print plainly, in ink, between and below heavy dots, the assignee's full name and mailing address, including zip code.

PART II

A. *Certification of assignee*

3. If assignee is an association or partnership, assignee *must* furnish a certified copy of its articles of association or partnership, with a statement that (a) it is authorized to hold geothermal resources leases; (b) that the person executing the assignment is authorized to act on behalf of the organization in such matters; and (c) names and addresses of members controlling more than 10 percent interest.

If assignee is a corporation, it *must* submit a statement containing the following information: (a) State in which it was incorporated; (b) that it is authorized to hold geothermal resources leases; (c) that officer executing assignment is authorized to act on behalf of the corporation in such matters; and (d) percentage of voting stock and percentage of *all* stock owned by aliens or those having addresses outside the United States. If 10 percent or more of the stock of any class is owned or controlled by or on behalf of any one stockholder, a separate showing of his citizenship and holdings *must* be furnished.

If evidence of qualifications and ownership has previously been furnished as required by the above, reference by serial number of record in which it was filed together with a statement as to any amendments. Qualifications of assignee *must* be in full compliance with the regulations (43 CFR 3241.1–2).

4. *Statement of interests* – Assignee *must* indicate whether or not he is the sole party in interest in the assignment; if not, assignee *must* submit, at time assignment is filed, a signed statement giving the names of other interested parties. If there are other parties interested in the assignment, a separate statement *must* be signed by each assignee, giving the nature and extent of the interest of each, the nature of agreement between them, if oral; and a copy of agreement, if written. *All* interested parties *must* furnish evidence of their qualifications to hold such lease interests. Separate statements and written agreements, if any, *must* be filed with the filing of the assignment.

EXHIBIT A

Attached hereto and made a part of that certain Letter Agreement dated as of August 21, 1984 by and between Thermal Power Company and Trans-Pacific Geothermal, Inc.

Federal Lease Serial Number	Description
North Block	
T24N-R36E, MDM	
N-8392	Section 16: All
N-8392	Section 17: All
N-17283 A	Section 20: East 1/2
N-17283 A	Section 21: All
N-17283 A	Section 22: All
South Block	
T23N-R35E, MDM	
N-8498	Section 11: All
N-10706	Section 12: All
N-8498	Section 13: All
N-11583	Section 14: All

On each of the five leases listed above, TPC reserves a production payment of ten dollars ($10.00) per net acre per year (i.e., five dollars $5.00 per year for each acre held by ~~TPC~~ TGI in each of the North and South Blocks), up to a total payment of $1,000,000 for the North and South Blocks taken together, such payments to commence with respect to each Block at the time commercial production commences on the respective Block. Such payments shall only be made from actual revenues from production established on the respective Block, and at the time TPC has received an aggregate of $1 million therefrom, said production payments shall cease as to both the North and South Blocks, and TGI will have no further obligation to make any payments to TPC. In the event that the North Block and/or the South Block is unitized together with other lands, and production is allocated to the North Block and/or the South Block pursuant to such unitization agreement, whether or not there is actual production from the North Block or the South Block, the production payment payable hereunder shall be calculated by multiplying the production payment otherwise payable if there were actual production from such lands, by the respective percentage of unit production allocated to the North Block and/or the South Block, as the case may be.

EXHIBIT "B"

1) 5% overriding royalty interest on the value of steam, or any other form of heat or other associated energy produced, processed, removed, sold or utilized from the lease;

2) 2½% overriding roylaty interest on the value of any by-product derived from production from the lease or produced, processed, removed, sold or utilized from the lease; and,

3) 2½% overriding royalty interest on the value of commercially demineralized water which is produced from the lease.

EXHIBIT "C"

(1) Southland Royalty Company reserves the following:

(i) A net operating profit interest of 5% until TGS Associates recovers $3,000,000 in gross profits from the sale of geothermal resources produced from assets conveyed in that certain Agreement dated September 23, 1981 by and between Southland Royalty Company and TGS Associates, (hereafter called Agreement); and thereafter

(ii) A net operating profit interest of 10% until TGS Associates recovers $6,000,000 in gross profit from the sale of geothermal resources produced from assets conveyed in that certain Agreement dated September 23, 1981 by and between Southland Royalty Company and TGS Associates; and thereafter

(iii) A net operating profit interest of 15% until Southland Royalty Company has received a total of $15,000,000 in proceeds from the net operating profits interest.

(2) At such time as Southland Royalty Company has recovered a total of $15,000,000 from the net operating profit interest described in items (i), (ii) and (iii) above, the net operating profit shall cease.

(3) The net operating profit interest shall be subject to and calculated in accordance with the terms of the Agreement.

188/6

Form 3200-17
(March 1975)

UNITED STATES
DEPARTMENT OF THE INTERIOR
BUREAU OF LAND MANAGEMENT

Serial No.
N-17283A
New Serial No.

ASSIGNMENT AFFECTING RECORD TITLE TO GEOTHERMAL RESOURCES LEASE

PART I

RECEIVED
Bur. of Land Management
NEVADA LAND OFFICE

SEP 11 1984
9:00 A.M.
NEVADA STATE OFFICE
RENO, NEVADA

1. TRANS-PACIFIC GEOTHERMAL, INC.
1419 Broadway, Suite 612
Oakland, CA 94612

The undersigned, as owner of 50% percent of record title of the above-designated geothermal resources lease issued effective *(date)* November 1, 1977, hereby transfers and assigns to the assignee shown above, the record title interest in and to such lease as specified below.

2. Describe the lands affected by this assignment *(43 CFR 3241.2-5)*

TOWNSHIP 24N, RANGE 36E: MDM

Section 20: E/2
Section 21: All
Section 22: All

Containing 1,600.00 Acres, more or less, Churchill County, Nevada

3. What part of assignor(s) record title interest is being conveyed to assignee? *(Give percentage or share)* 100%

4. What part of the record title interest is being retained by assignor(s)? NONE

5a. What overriding royalty or production payments is the assignor reserving herein? *(See Item 4 of General Instructions; specify percentage; no assignment will be approved which does not comply with 43 CFR 3241.7-2 on limitation of overriding royalties)* Production Payment described on attached Exhibit "A"

b. What overriding royalties or production payments, if any, were previously reserved or conveyed? *(Percentage only)* See Exhibits "B" and "C" attached.

It is agreed that the obligation to pay any overriding royalties or payments out of production of geothermal resources created herein, which, when added to overriding royalties or payments out of production previously created, aggregate in excess of 50 percent, of the rate of royalty due the United States, shall be suspended.

I CERTIFY That the statements made herein are true, complete, and correct to the best of my knowledge and belief and are made in good faith.

Executed this 2nd day of April, 1984

THERMAL POWER COMPANY
(Assignor's Signature)
W. L. D'Olier, Vice President

THERMAL POWER COMPANY
(Assignor's Address)
601 California Street
San Francisco, CA 94108
(City) (State) (Zip Code)

Title 18 U.S.C., Section 1001, makes it a crime for any person knowingly and willfully to make to any department or agency of the United States any false, fictitious, or fraudulent statements or representations as to any matter within its jurisdiction.

THE UNITED STATES OF AMERICA

Assignment approved as to the lands described below:

SAME AS ITEM 2

Assignment approved effective OCT 01 1984

By Marla B. Bohl
(Authorized Officer)

Chief, Branch of Lands & Minerals Operations
(Title)

FEB 06 1985
(Date)

NOTE: This form may be reproduced provided that copies are exact reproductions on one sheet of both sides of this official form in accordance with the provisions of 43 CFR 3241.2-4.

PART II

ASSIGNEE'S REQUEST FOR APPROVAL OF ASSIGNMENT

A. ASSIGNEE CERTIFIES THAT

1. Assignee is qualified to hold a geothermal resources lease under 43 CFR 3202.1
2. Assignee is [ ] Individual [ ] Municipality [ ] Association [X] Corporation
3. Assignee is the sole party in interest in this assignment *(information as to interests of other parties in this assignment must be furnished as prescribed in Specific Instructions)*
4. Filing fee of $50 is attached *(See Item 2 of General Instructions)*
5. Assignee's interests, direct and indirect, in geothermal resources leases, do not exceed 20,480 chargeable acres *(43 CFR 3201.2)*

B. ASSIGNEE AGREES to be bound by the terms and provisions of the lease described here, provided the assignment is approved by the Authorized Officer.

C. IT IS HEREBY CERTIFIED That the statements made herein are true, complete, and correct to the best of undersigned's knowledge and belief and are made in good faith.

Executed this 30 day of August, 19 84

TRANS-PACIFIC GEOTHERMAL, INC.

Tsvi Meidav

(Assignee's Signature)

Tsvi Meidav, President

Trans-Pacific Geothermal, Inc.
1419 Broadway, Suite 612
Oakland, CA 94612

(Address, include zip code)

Title 18 U.S.C., Section 1001, makes it a crime for any person knowingly and willfully to make to any department or agency of the United States any false, fictitious, or fraudulent statements or representations as to any matter within its jurisdiction.

GENERAL INSTRUCTIONS

1. *Use of form* — Use only for assignment of record title interest in geothermal resources leases, *and for assignments of working or royalty interests, operating agreements, or subleases.* An assignment of record title may only cover lands in *one* lease. If more than one assignment is made out of a lease, file a separate instrument of transfer with *each* assignment.

2. *Filing and number of copies* — File three (3) completed and manually signed copies in proper BLM office. A $50 nonrefundable filing fee *must* accompany assignment. File assignment within ninety (90) days *after* date of final execution.

3. *Effective date of assignment* — Assignment, if approved, takes effect on the first day of the month following the date of filing of *all* required papers.

4. *Overriding royalties or payments out of production* — Describe in an accompanying statement any overriding royalties or payments out of production created by assignment but not set out therein. If payments out of production are reserved by assignor, outline in detail the amount, method of payment, and other pertinent terms.

5. *Effect of assignment* — Approval of assignment of a definitely described portion of the leased lands creates separate leases. Assignee, upon approval of assignment, becomes lessee of the Government as to the assigned interest and is responsible for complying with *all* lease terms and conditions, including timely payment of annual rental and maintenance of any required bond; *except* in the case of assignment of undivided interests, royalties, and operating agreements.

6. A copy of the executed lease, out of which this assignment is made, should be made available to assignee by assignor.

SPECIFIC INSTRUCTIONS

(Items not specified are self-explanatory)

PART I

Item 1 — Type or print plainly, in ink, between and below heavy dots, the assignee's full name and mailing address, including zip code.

PART II

A. *Certification of assignee*

3. If assignee is an association or partnership, assignee *must* furnish a certified copy of its articles of association or partnership, with a statement that (a) it is authorized to hold geothermal resources leases; (b) that the person executing the assignment is authorized to act on behalf of the organization in such matters; and (c) names and addresses of members controlling more than 10 percent interest.

If assignee is a corporation, it *must* submit a statement containing the following information: (a) State in which it was incorporated; (b) that it is authorized to hold geothermal resources leases; (c) that officer executing assignment is authorized to act on behalf of the corporation in such matters; and (d) percentage of voting stock and percentage of *all* stock owned by aliens or those having addresses outside the United States. If 10 percent or more of the stock of any class is owned or controlled by or on behalf of any one stockholder, a separate showing of his citizenship and holdings *must* be furnished.

If evidence of qualifications and ownership has previously been furnished as required by the above, reference by serial number of record in which it was filed together with a statement as to any amendments. Qualifications of assignee *must* be in full compliance with the regulations (43 CFR 3241.1–2).

4. *Statement of interests* — Assignee *must* indicate whether or not he is the sole party in interest in the assignment; if not, assignee *must* submit, at time assignment is filed, a signed statement giving the names of other interested parties. If there are other parties interested in the assignment, a separate statement *must* be signed by each assignee, giving the nature and extent of the interest of each, the nature of agreement between them, if oral; and a copy of agreement, if written. *All* interested parties *must* furnish evidence of their qualifications to hold such lease interests. Separate statements and written agreements, if any, *must* be filed with the filing of the assignment.

STATE OF CALIFORNIA)
) SS.
City and County of San Francisco)

On April 2nd, 19 84, before me the undersigned, a Notary Public in and for the said State, personally appeared W. L. D'Olier personally known to me (or proved to me on the basis of satisfactory evidence) to be the person who executed the within instrument as Vice President on behalf of the corporation therein named and acknowledged to me that the corporation executed it.

OFFICIAL SEAL
DENISE LA MUSGA
NOTARY PUBLIC - CALIFORNIA
SAN FRANCISCO COUNTY
My comm. expires JUN 10, 1985

Denise La Musga
Notary Public in and for said State

EXHIBIT A

Attached hereto and made a part of that certain Letter Agreement dated as of August 21, 1984 by and between Thermal Power Company and Trans-Pacific Geothermal, Inc.

Federal Lease Serial Number	Description
North Block	
T24N-R36E, MDM	
N-8392	Section 16: All
N-8392	Section 17: All
N-17283 A	Section 20: East 1/2
N-17283 A	Section 21: All
N-17283 A	Section 22: All
South Block	
T23N-R35E, MDM	
N-8498	Section 11: All
N-10706	Section 12: All
N-8498	Section 13: All
N-11583	Section 14: All

On each of the five leases listed above, TPC reserves a production payment of ten dollars ($10.00) per net acre per year (i.e., five dollars $5.00 per year for each acre held by ~~TPC~~ TGI in each of the North and South Blocks), up to a total payment of $1,000,000 for the North and South Blocks taken together, such payments to commence with respect to each Block at the time commercial production commences on the respective Block. Such payments shall only be made from actual revenues from production established on the respective Block, and at the time TPC has received an aggregate of 1 million ~~therefrom~~, said production payments shall cease as to both the North and South Blocks, and TGI will have no further obligation to make any payments to TPC. In the event that the North Block and/or the South Block is unitized together with other lands, and production is allocated to the North Block and/or the South Block pursuant to such unitization agreement, whether or not there is actual production from the North Block or the South Block, the production payment payable hereunder shall be calculated by multiplying the production payment otherwise payable if there were actual production from such lands, by the respective percentage of unit production allocated to the North Block and/or the South Block, as the case may be.

EXHIBIT "B"

1) 5% overriding royalty interest on the value of steam, or any other form of heat or other associated energy produced, processed, removed, sold or utilized from the lease;

2) 2½% overriding roylaty interest on the value of any by-product derived from production from the lease or produced, processed, removed, sold or utilized from the lease; and,

3) 2½% overriding royalty interest on the value of commercially demineralized water which is produced from the lease.

EXHIBIT "C"

(1) Southland Royalty Company reserves the following:

(i) A net operating profit interest of 5% until TGS Associates recovers $3,000,000 in gross profits from the sale of geothermal resources produced from assets conveyed in that certain Agreement dated September 23, 1981 by and between Southland Royalty Company and TGS Associates, (hereafter called Agreement); and thereafter

(ii) A net operating profit interest of 10% until TGS Associates recovers $6,000,000 in gross profit from the sale of geothermal resources produced from assets conveyed in that certain Agreement dated September 23, 1981 by and between Southland Royalty Company and TGS Associates; and thereafter

(iii) A net operating profit interest of 15% until Southland Royalty Company has received a total of $15,000,000 in proceeds from the net operating profits interest.

(2) At such time as Southland Royalty Company has recovered a total of $15,000,000 from the net operating profit interest described in items (i), (ii) and (iii) above, the net operating profit shall cease.

(3) The net operating profit interest shall be subject to and calculated in accordance with the terms of the Agreement.

Form 3200-17
(March 1975)

UNITED STATES
DEPARTMENT OF THE INTERIOR
BUREAU OF LAND MANAGEMENT

Serial No.
N-17283-A

New Serial No.
18876

ASSIGNMENT AFFECTING RECORD TITLE TO GEOTHERMAL RESOURCES LEASE
PART I

JUN 1 1982

TGS ASSOCIATES c/o Trans-Pacific Geothermal, Inc.
1419 Broadway, Suite 612
Oakland, California 94612

The undersigned, as owner of 50% percent of record title of the above-designated geothermal resources lease issued effective *(date)* November 1, 1977, hereby transfers and assigns to the assignee shown above, the record title interest in and to such lease as specified below.

2. Describe the lands affected by this assignment *(43 CFR 3241.2-5)*
Township 24 North, Range 36 East; Mount Diablo Meridian

Section 20: E½;
Section 21: All;
Section 22: All.

Containing 1,600.00 Acres, more or less, located in Churchill County, Nevada.

3. What part of assignor(s) record title interest is being conveyed to assignee? *(Give percentage or share)* 100%

4. What part of the record title interest is being retained by assignor(s)? NONE

5a. What overriding royalty or production payments is the assignor reserving herein? *(See Item 4 of General Instructions; specify percentage; no assignment will be approved which does not comply with 43 CFR 3231.7-2 on limitation of overriding royalties)* See Exhibit "B" attached to and made part of this Assignment.

b. What overriding royalties or production payments, if any, were previously reserved or conveyed? *(Percentage only)* See Exhibit "A" attached to and made part of this Assignment.

It is agreed that the obligation to pay any overriding royalties or payments out of production of geothermal resources created herein, which, when added to overriding royalties or payments out of production previously created, aggregate in excess of 50 percent, of the rate of royalty due the United States, shall be suspended.

I CERTIFY That the statements made herein are true, complete, and correct to the best of my knowledge and belief and are made in good faith.

Executed this 21st day of October, 1981.
SOUTHLAND ROYALTY COMPANY

C. J. Caskey
(Assignor's Signature)
C. J. CASKEY, Vice President

1000 Fort Worth Club Tower
(Assignor's Address)

ATTEST: Patricia A. Cox
Asst. Secretary

Fort Worth TX 76102
(City) (State) (Zip Code)

Title 18 U.S.C., Section 1001, makes it a crime for any person knowingly and willfully to make to any department or agency of the United States any false, fictitious, or fraudulent statements or representations as to any matter within its jurisdiction.

THE UNITED STATES OF AMERICA

Assignment approved as to the lands described below:

SAME AS ITEM 2

Assignment approved effective DEC 01 1981

By Richard G. Morrison
(Authorized Officer)

Chief, Branch of Lands & Minerals Operations
(Title)

APR 30 1982
(Date)

NOTE: This form may be reproduced provided that copies are exact reproductions on one sheet of both sides of this official form in accordance with the provisions of 43 CFR 3241.2-4.

PART II

ASSIGNEE'S REQUEST FOR APPROVAL OF ASSIGNMENT

A. ASSIGNEE CERTIFIES THAT

1. Assignee is qualified to hold a geothermal resources lease under 43 CFR 3202.1
2. Assignee is ☐ Individual ☐ Municipality ☑ Association ☐ Corporation
3. Assignee is the sole party in interest in this assignment *(information as to interests of other parties in this assignment must be furnished as prescribed in Specific Instructions)*
4. Filing fee of $50 is attached *(See Item 2 of General Instructions)*
5. Assignee's interests, direct and indirect, in geothermal resources leases, do not exceed 20,480 chargeable acres *(43 CFR 3201.2)*

B. ASSIGNEE AGREES to be bound by the terms and provisions of the lease described here, provided the assignment is approved by the Authorized Officer.

C. IT IS HEREBY CERTIFIED That the statements made herein are true, complete, and correct to the best of undersigned's knowledge and belief and are made in good faith.

Executed this 30th day of October, 19 81

TGS ASSOCIATES
By: TRANS-PACIFIC GEOTHERMAL, INC.,
H. (General Partner) Meidav
(Assignee's Signature)

By:
H. TSVI MEIDAV (PRESIDENT)
TGS ASSOCIATES
c/o TRANS-PACIFIC GEOTHERMAL, INC.
1419 Broadway
Oakland, CA 94612
(Address include zip code)

Title 18 U.S.C., Section 1001, makes it a crime for any person knowingly and willfully to make to any department or agency of the United States any false, fictitious, or fraudulent statements or representations as to any matter within its jurisdiction.

GENERAL INSTRUCTIONS

1. *Use of form* — Use only for assignment of record title interest in geothermal resources leases, *and for assignments of working or royalty interests, operating agreements, or subleases.* An assignment of record title may only cover lands in *one* lease. If more than one assignment is made out of a lease, file a separate instrument of transfer with *each* assignment.

2. *Filing and number of copies* — File three (3) completed and manually signed copies in proper BLM office. A $50 nonrefundable filing fee *must* accompany assignment. File assignment within ninety (90) days *after* date of final execution.

3. *Effective date of assignment* — Assignment, if approved, takes effect on the first day of the month following the date of filing of *all* required papers.

4. *Overriding royalties or payments out of production* — Describe in an accompanying statement any overriding royalties or payments out of production created by assignment but not set out therein. If payments out of production are reserved by assignor, outline in detail the amount, method of payment, and other pertinent terms.

5. *Effect of assignment* — Approval of assignment of a definitely described portion of the leased lands creates separate leases. Assignee, upon approval of assignment, becomes lessee of the Government as to the assigned interest and is responsible for complying with *all* lease terms and conditions, including timely payment of annual rental and maintenance of any required bond; *except* in the case of assignment of undivided interests, royalties, and operating agreements.

6. A copy of the executed lease, out of which this assignment is made, should be made available to assignee by assignor.

SPECIFIC INSTRUCTIONS

(Items not specified are self-explanatory)

PART I

Item 1 — Type or print plainly, in ink, between and below heavy dots, the assignee's full name and mailing address, including zip code.

PART II

A. *Certification of assignee*

3. If assignee is an association or partnership, assignee *must* furnish a certified copy of its articles of association or partnership, with a statement that (a) it is authorized to hold geothermal resources leases; (b) that the person executing the assignment is authorized to act on behalf of the organization in such matters; and (c) names and addresses of members controlling more than 10 percent interest.

If assignee is a corporation, it *must* submit a statement containing the following information: (a) State in which it was incorporated; (b) that it is authorized to hold geothermal resources leases; (c) that officer executing assignment is authorized to act on behalf of the corporation in such matters; and (d) percentage of voting stock and percentage of *all* stock owned by aliens or those having addresses outside the United States. If 10 percent or more of the stock of any class is owned or controlled by or on behalf of any one stockholder, a separate showing of his citizenship and holdings *must* be furnished.

If evidence of qualifications and ownership has previously been furnished as required by the above, reference by serial number of record in which it was filed together with a statement as to any amendments. Qualifications of assignee *must* be in full compliance with the regulations (43 CFR 3241.1–2).

4. *Statement of Interests* — Assignee *must* indicate whether or not he is the sole party in interest in the assignment; if not, assignee *must* submit, at time assignment is filed, a signed statement giving the names of other interested parties. If there are other parties interested in the assignment, a separate statement *must* be signed by each assignee, giving the nature and extent of the interest of each, the nature of agreement between them, if oral; and a copy of agreement, if written. *All* interested parties *must* furnish evidence of their qualifications to hold such lease interests. Separate statements and written agreements, if any, *must* be filed with the filing of the assignment.

GPO 833-210

Form 3200-17
(March 1975)

UNITED STATES
DEPARTMENT OF THE INTERIOR
BUREAU OF LAND MANAGEMENT

Serial No.
N-17283A
New Serial No.
Same

ASSIGNMENT AFFECTING RECORD TITLE TO GEOTHERMAL RESOURCES LEASE

PART I

Thermal Power Company
601 California Street
San Francisco, California 94108

RECEIVED
MAY 18 1979
TPC

The undersigned, as owner of 100% percent of record title of the above-designated geothermal resources lease issued effective *(date)* November 1, 1977, hereby transfers and assigns to the assignee shown above, the record title interest in and to such lease as specified below.

2. Describe the lands affected by this assignment *(43 CFR 3241.2-5)*

Township 24N-Range 36E MDM: Churchill County, Nevada

Section 20: E/2
Section 21: All
Section 22: All

3. What part of assignor(s) record title interest is being conveyed to assignee? *(Give percentage or share)* 50%

4. What part of the record title interest is being retained by assignor(s)? 50%

5a. What overriding royalty or production payments is the assignor reserving herein? *(See Item 4 of General Instructions; specify percentage; no assignment will be approved which does not comply with 43 CFR 3231.7-2 on limitation of overriding royalties)* None

b. What overriding royalties or production payments, if any, were previously reserved or conveyed? *(Percentage only)* 5% Geothermal Steam and 2½% Dissolved Minerals

It is agreed that the obligation to pay any overriding royalties or payments out of production of geothermal resources created herein, which, when added to overriding royalties or payments out of production previously created, aggregate in excess of 50 percent, of the rate of royalty due the United States, shall be suspended.

I CERTIFY That the statements made herein are true, complete, and correct to the best of my knowledge and belief and are made in good faith.

Executed this 26th day of February, 1979
Southland Royalty Company

By C. J. Caskey
(Assignor's Signature)

C. J. Caskey, Vice President

Southland Royalty Company
1000 Fort Worth Club Tower
(Assignor's Address)

Fort Worth, Texas 76102
(City) (State) (Zip Code)

Title 18 U.S.C., Section 1001, makes it a crime for any person knowingly and willfully to make to any department or agency of the United States any false, fictitious, or fraudulent statements or representations as to any matter within its jurisdiction.

THE UNITED STATES OF AMERICA

Assignment approved as to the lands described below:

Same as item 2.

Containing 1600.00 acres.

Assignment approved effective 4-1-79

By Roger A. Jarrell
(Authorized Officer)

Chief, Lands & Minerals Operations 5-15-79
(Title) (Date)

NOTE: This form may be reproduced provided that copies are exact reproductions on one sheet of both sides of this official form in accordance with the provisions of 43 CFR 3241.2-4.

PART II

ASSIGNEE'S REQUEST FOR APPROVAL OF ASSIGNMENT

A. ASSIGNEE CERTIFIES THAT

1. Assignee is qualified to hold a geothermal resources lease under 43 CFR 3202.1
2. Assignee is ☐ Individual ☐ Municipality ☐ Association ☒ Corporation
3. Assignee is the sole party in interest in this assignment *(information as to interests of other parties in this assignment must be furnished as prescribed in Specific Instructions)*
4. Filing fee of $50 is attached *(See Item 2 of General Instructions)*
5. Assignee's interests, direct and indirect, in geothermal resources leases, do not exceed 20,480 chargeable acres *(43 CFR 3201.2)*

B. ASSIGNEE AGREES to be bound by the terms and provisions of the lease described here, provided the assignment is approved by the Authorized Officer.

C. IT IS HEREBY CERTIFIED That the statements made herein are true, complete, and correct to the best of undersigned's knowledge and belief and are made in good faith.

Executed this 8th day of March, 1979

THERMAL POWER COMPANY

By W. L. D'Olier
(Assignee's Signature)

W. L. D'Olier, Vice President

Thermal Power Company
601 California Street
San Francisco, California 94108

(Address, include zip code)

Title 18 U.S.C., Section 1001, makes it a crime for any person knowingly and willfully to make to any department or agency of the United States any false, fictitious, or fraudulent statements or representations as to any matter within its jurisdiction.

GENERAL INSTRUCTIONS

1. *Use of form* — Use only for assignment of record title interest in geothermal resources leases, *and for assignments of working or royalty interests, operating agreements, or subleases.* An assignment of record title may only cover lands in *one* lease. If more than one assignment is made out of a lease, file a separate instrument of transfer with *each* assignment.

2. *Filing and number of copies* — File three (3) completed and manually signed copies in proper BLM office. A $50 nonrefundable filing fee *must* accompany assignment. File assignment within ninety (90) days *after* date of final execution.

3. *Effective date of assignment* — Assignment, if approved, takes effect on the first day of the month following the date of filing of *all* required papers.

4. *Overriding royalties or payments out of production* — Describe in an accompanying statement any overriding royalties or payments out of production created by assignment but not set out therein. If payments out of production are reserved by assignor, outline in detail the amount, method of payment, and other pertinent terms.

5. *Effect of assignment* — Approval of assignment of a definitely described portion of the leased lands creates separate leases. Assignee, upon approval of assignment, becomes lessee of the Government as to the assigned interest and is responsible for complying with *all* lease terms and conditions, including timely payment of annual rental and maintenance of any required bond; *except* in the case of assignment of undivided interests, royalties, and operating agreements.

6. A copy of the executed lease, out of which this assignment is made, should be made available to assignee by assignor.

SPECIFIC INSTRUCTIONS

(Items not specified are self-explanatory)

PART I

Item 1 — Type or print plainly, in ink, between and below heavy dots, the assignee's full name and mailing address, including zip code.

PART II

A. *Certification of assignee*

3. If assignee is an association or partnership, assignee *must* furnish a certified copy of its articles of association or partnership, with a statement that (a) it is authorized to hold geothermal resources leases; (b) that the person executing the assignment is authorized to act on behalf of the organization in such matters; and (c) names and addresses of members controlling more than 10 percent interest.

If assignee is a corporation, it *must* submit a statement containing the following information: (a) State in which it was incorporated; (b) that it is authorized to hold geothermal resources leases; (c) that officer executing assignment is authorized to act on behalf of the corporation in such matters; and (d) percentage of voting stock and percentage of *all* stock owned by aliens or those having addresses outside the United States. If 10 percent or more of the stock of any class is owned or controlled by or on behalf of any one stockholder, a separate showing of his citizenship and holdings *must* be furnished.

If evidence of qualifications and ownership has previously been furnished as required by the above, reference by serial number of record in which it was filed together with a statement as to any amendments. Qualifications of assignee *must* be in full compliance with the regulations (43 CFR 3241.1–2).

4. *Statement of interests* — Assignee *must* indicate whether or not he is the sole party in interest in the assignment; if not, assignee *must* submit, at time assignment is filed, a signed statement giving the names of other interested parties. If there are other parties interested in the assignment, a separate statement *must* be signed by each assignee, giving the nature and extent of the interest of each, the nature of agreement between them, if oral; and a copy of agreement, if written. *All* interested parties *must* furnish evidence of their qualifications to hold such lease interests. Separate statements and written agreements, if any, *must* be filed with the filing of the assignment.

Form 3200-17
(March 1975)

UNITED STATES
DEPARTMENT OF THE INTERIOR
BUREAU OF LAND MANAGEMENT

Serial No.
N-17283

New Serial No.
N-17283-A

RECEIVED
BUREAU OF LAND MANAGEMENT
NEVADA STATE OFFICE
1979 JAN 18 AM 10 11

ASSIGNMENT AFFECTING RECORD TITLE TO GEOTHERMAL RESOURCES LEASE

PART I

Southland Royalty Company
1000 Fort Worth Club Tower
Fort Worth, Texas 76102

The undersigned, as owner of 73-½% percent of record title of the above-designated geothermal resources lease issued effective *(date)* November 1, 1977, hereby transfers and assigns to the assignee shown above, the record title interest in and to such lease as specified below.

2. Describe the lands affected by this assignment *(43 CFR 3241.2-5)*

Township 24N-Range 36E MDM: Churchill County, Nevada

Section 20: E/2 + 320
Section 21: All
Section 22: All
= 1600

3. What part of assignor(s) record title interest is being conveyed to assignee? *(Give percentage or share)* 100%

4. What part of the record title interest is being retained by assignor(s)? None

5a. What overriding royalty or production payments is the assignor reserving herein? *(See Item 4 of General Instructions; specify percentage; no assignment will be approved which does not comply with 43 CFR 3231.7-2 on limitation of overriding royalties)* 5% Geothermal Steam, 2-½% Dissolved Minerals

b. What overriding royalties or production payments, if any, were previously reserved or conveyed? *(Percentage only)* None

It is agreed that the obligation to pay any overriding royalties or payments out of production of geothermal resources created herein, which, when added to overriding royalties or payments out of production previously created, aggregate in excess of 50 percent, of the rate of royalty due the United States, shall be suspended.

I CERTIFY That the statements made herein are true, complete, and correct to the best of my knowledge and belief and are made in good faith.

Executed this 16 day of January, 1979

(Assignor's Signature)

W. M. Hughes, et al
618 Fair Foundation Building
(Assignor's Address)

Tyler, Texas 75702
(City) (State) (Zip Code)

Title 18 U.S.C., Section 1001, makes it a crime for any person knowingly and willfully to make to any department or agency of the United States any false, fictitious, or fraudulent statements or representations as to any matter within its jurisdiction.

THE UNITED STATES OF AMERICA

Assignment approved as to the lands described below:

T. 24 N., R. 36 E., MDM, Nevada - Churchill County
sec. 20, E½;
sec. 21, All;
sec. 22, All.
Containing 1600.00 acres.

Assignment approved effective 2/1/79

By William K. Stowers Acting
(Authorized Officer)

Chief, Lands & Minerals Operations
(Title)

2/2/79
(Date)

NOTE: This form may be reproduced provided that copies are exact reproductions on one sheet of both sides of this official form in accordance with the provisions of 43 CFR 3241.2-4.

018876-00

PART II

ASSIGNEE'S REQUEST FOR APPROVAL OF ASSIGNMENT

A. ASSIGNEE CERTIFIES THAT

1. Assignee is qualified to hold a geothermal resources lease under 43 CFR 3202.1
2. Assignee is ☐ Individual ☐ Municipality ☐ Association ☒ Corporation
3. Assignee is the sole party in interest in this assignment *(information as to interests of other parties in this assignment must be furnished as prescribed in Specific Instructions)*
4. Filing fee of $50 is attached *(See Item 2 of General Instructions)*
5. Assignee's interests, direct and indirect, in geothermal resources leases, do not exceed 20,480 chargeable acres *(43 CFR 3201.2)*

B. ASSIGNEE AGREES to be bound by the terms and provisions of the lease described here, provided the assignment is approved by the Authorized Officer.

C. IT IS HEREBY CERTIFIED That the statements made herein are true, complete, and correct to the best of undersigned's knowledge and belief and are made in good faith.

Executed this 16 day of January, 1979

Vice President (Assignee's Signature)

Southland Royalty Company
1000 Fort Worth Club Tower
Fort Worth, Texas 76102
(Address, include zip code)

Title 18 U.S.C., Section 1001, makes it a crime for any person knowingly and willfully to make to any department or agency of the United States any false, fictitious, or fraudulent statements or representations as to any matter within its jurisdiction.

GENERAL INSTRUCTIONS

1. *Use of form* — Use only for assignment of record title interest in geothermal resources leases, *and for assignments of working or royalty interests, operating agreements, or subleases.* An assignment of record title may only cover lands in *one* lease. If more than one assignment is made out of a lease, file a separate instrument of transfer with *each* assignment.

2. *Filing and number of copies* — File three (3) completed and manually signed copies in proper BLM office. A $50 nonrefundable filing fee *must* accompany assignment. File assignment within ninety (90) days *after* date of final execution.

3. *Effective date of assignment* — Assignment, if approved, takes effect on the first day of the month following the date of filing of *all* required papers.

4. *Overriding royalties or payments out of production* — Describe in an accompanying statement any overriding royalties or payments out of production created by assignment but not set out therein. If payments out of production are reserved by assignor, outline in detail the amount, method of payment, and other pertinent terms.

5. *Effect of assignment* — Approval of assignment of a definitely described portion of the leased lands creates separate leases. Assignee, upon approval of assignment, becomes lessee of the Government as to the assigned interest and is responsible for complying with *all* lease terms and conditions, including timely payment of annual rental and maintenance of any required bond; *except* in the case of assignment of undivided interests, royalties, and operating agreements.

6. A copy of the executed lease, out of which this assignment is made, should be made available to assignee by assignor.

SPECIFIC INSTRUCTIONS

(Items not specified are self-explanatory)

PART I

Item 1 — Type or print plainly, in ink, between and below heavy dots, the assignee's full name and mailing address, including zip code.

PART II

A. *Certification of assignee*

3. If assignee is an association or partnership, assignee *must* furnish a certified copy of its articles of association or partnership, with a statement that (a) it is authorized to hold geothermal resources leases; (b) that the person executing the assignment is authorized to act on behalf of the organization in such matters; and (c) names and addresses of members controlling more than 10 percent interest.

If assignee is a corporation, it *must* submit a statement containing the following information: (a) State in which it was incorporated; (b) that it is authorized to hold geothermal resources leases; (c) that officer executing assignment is authorized to act on behalf of the corporation in such matters; and (d) percentage of voting stock and percentage of *all* stock owned by aliens or those having addresses outside the United States. If 10 percent or more of the stock of any class is owned or controlled by or on behalf of any one stockholder, a separate showing of his citizenship and holdings *must* be furnished.

If evidence of qualifications and ownership has previously been furnished as required by the above, reference by serial number of record in which it was filed together with a statement as to any amendments. Qualifications of assignee *must* be in full compliance with the regulations (43 CFR 3241.1–2).

4. *Statement of interests* — Assignee *must* indicate whether or not he is the sole party in interest in the assignment; if not, assignee *must* submit, at time assignment is filed, a signed statement giving the names of other interested parties. If there are other parties interested in the assignment, a separate statement *must* be signed by each assignee, giving the nature and extent of the interest of each, the nature of agreement between them, if oral; and a copy of agreement, if written. *All* interested parties *must* furnish evidence of their qualifications to hold such lease interests. Separate statements and written agreements, if any, *must* be filed with the filing of the assignment.

Form 3200-17
(March 1975)

UNITED STATES
DEPARTMENT OF THE INTERIOR
BUREAU OF LAND MANAGEMENT

Serial No.
N-17283

New Serial No.
N-17283-A

ASSIGNMENT AFFECTING RECORD TITLE TO GEOTHERMAL RESOURCES LEASE

PART I

Southland Royalty Company
1000 Fort Worth Club Tower
Fort Worth, Texas 76102

The undersigned, as owner of 26-½% percent of record title of the above-designated geothermal resources lease issued effective *(date)* November 1, 1977, hereby transfers and assigns to the assignee shown above, the record title interest in and to such lease as specified below.

2. Describe the lands affected by this assignment *(43 CFR 3241.2-5)*

Township 24N-Range 36E MDM: Churchill County, Nevada

Section 20: E/2
Section 21: All
Section 22: All

3. What part of assignor(s) record title interest is being conveyed to assignee? *(Give percentage or share)* 100%

4. What part of the record title interest is being retained by assignor(s)? None

5a. What overriding royalty or production payments is the assignor reserving herein? *(See Item 4 of General Instructions; specify percentage; no assignment will be approved which does not comply with 43 CFR 3231.7-2 on limitation of overriding royalties)* 5% Geothermal Steam, 2-½% Dissolved Minerals

b. What overriding royalties or production payments, if any, were previously reserved or conveyed? *(Percentage only)* None

It is agreed that the obligation to pay any overriding royalties or payments out of production of geothermal resources created herein, which, when added to overriding royalties or payments out of production previously created, aggregate in excess of 50 percent, of the rate of royalty due the United States, shall be suspended.

I CERTIFY That the statements made herein are true, complete, and correct to the best of my knowledge and belief and are made in good faith.

Executed this 16 day of January, 19 79

Thomas W. Clay
(Assignor's Signature)

Millican Oil Company
908 Town & Country Boulevard
(Assignor's Address)

Houston, Texas 77024
(City) (State) (Zip Code)

Title 18 U.S.C., Section 1001, makes it a crime for any person knowingly and willfully to make to any department or agency of the United States any false, fictitious, or fraudulent statements or representations as to any matter within its jurisdiction.

THE UNITED STATES OF AMERICA

Assignment approved as to the lands described below:

T. 24 N., R. 36 E., MDM, Nevada - Churchill County
sec. 20, E½;
sec. 21, All;
sec. 22, All.

Containing 1600.00 acres.

Assignment approved effective 2/1/79

By William K. Stowers Acting
(Authorized Officer)

Chief, Lands & Minerals Operations **2/2/79**
(Title) (Date)

NOTE: This form may be reproduced provided that copies are exact reproductions on one sheet of both sides of this official form in accordance with the provisions of 43 CFR 3241.2-4.

01887 6-00

PART II

ASSIGNEE'S REQUEST FOR APPROVAL OF ASSIGNMENT

A. ASSIGNEE CERTIFIES THAT

1. Assignee is qualified to hold a geothermal resources lease under 43 CFR 3202.1
2. Assignee is ☐ Individual ☐ Municipality ☐ Association ☒ Corporation
3. Assignee is the sole party in interest in this assignment *(information as to interests of other parties in this assignment must be furnished as prescribed in Specific Instructions)*
4. Filing fee of $50 is attached *(See Item 2 of General Instructions)*
5. Assignee's interests, direct and indirect, in geothermal resources leases, do not exceed 20,480 chargeable acres *(43 CFR 3201.2)*

B. ASSIGNEE AGREES to be bound by the terms and provisions of the lease described here, provided the assignment is approved by the Authorized Officer.

C. IT IS HEREBY CERTIFIED That the statements made herein are true, complete, and correct to the best of undersigned's knowledge and belief and are made in good faith.

Executed this 16 day of January, 19 79

C J Caskey
Vice President (Assignee's Signature)

Southland Royalty Company
1000 Fort Worth Club Tower
Fort Worth, Texas 76102
(Address, include zip code)

Title 18 U.S.C., Section 1001, makes it a crime for any person knowingly and willfully to make to any department or agency of the United States any false, fictitious, or fraudulent statements or representations as to any matter within its jurisdiction.

GENERAL INSTRUCTIONS

1. *Use of form* — Use only for assignment of record title interest in geothermal resources leases, *and for assignments of working or royalty interests, operating agreements, or subleases.* An assignment of record title may only cover lands in *one* lease. If more than one assignment is made out of a lease, file a separate instrument of transfer with *each* assignment.

2. *Filing and number of copies* — File three (3) completed and manually signed copies in proper BLM office. A $50 nonrefundable filing fee *must* accompany assignment. File assignment within ninety (90) days *after* date of final execution.

3. *Effective date of assignment* — Assignment, if approved, takes effect on the first day of the month following the date of filing of *all* required papers.

4. *Overriding royalties or payments out of production* — Describe in an accompanying statement any overriding royalties or payments out of production created by assignment but not set out therein. If payments out of production are reserved by assignor, outline in detail the amount, method of payment, and other pertinent terms.

5. *Effect of assignment* — Approval of assignment of a definitely described portion of the leased lands creates separate leases. Assignee, upon approval of assignment, becomes lessee of the Government as to the assigned interest and is responsible for complying with *all* lease terms and conditions, including timely payment of annual rental and maintenance of any required bond; *except* in the case of assignment of undivided interests, royalties, and operating agreements.

6. A copy of the executed lease, out of which this assignment is made, should be made available to assignee by assignor.

SPECIFIC INSTRUCTIONS

(Items not specified are self-explanatory)

PART I

Item 1 — Type or print plainly, in ink, between and below heavy dots, the assignee's full name and mailing address, including zip code.

PART II

A. Certification of assignee

3. If assignee is an association or partnership, assignee *must* furnish a certified copy of its articles of association or partnership, with a statement that (a) it is authorized to hold geothermal resources leases; (b) that the person executing the assignment is authorized to act on behalf of the organization in such matters; and (c) names and addresses of members controlling more than 10 percent interest.

If assignee is a corporation, it *must* submit a statement containing the following information: (a) State in which it was incorporated; (b) that it is authorized to hold geothermal resources leases; (c) that officer executing assignment is authorized to act on behalf of the corporation in such matters; and (d) percentage of voting stock and percentage of *all* stock owned by aliens or those having addresses outside the United States. If 10 percent or more of the stock of any class is owned or controlled by or on behalf of any one stockholder, a separate showing of his citizenship and holdings *must* be furnished.

If evidence of qualifications and ownership has previously been furnished as required by the above, reference by serial number of record in which it was filed together with a statement as to any amendments. Qualifications of assignee *must* be in full compliance with the regulations (43 CFR 3241.1–2).

4. *Statement of interests* — Assignee *must* indicate whether or not he is the sole party in interest in the assignment; if not, assignee *must* submit, at time assignment is filed, a signed statement giving the names of other interested parties. If there are other parties interested in the assignment, a separate statement *must* be signed by each assignee, giving the nature and extent of the interest of each, the nature of agreement between them, if oral; and a copy of agreement, if written. *All* interested parties *must* furnish evidence of their qualifications to hold such lease interests. Separate statements and written agreements, if any, *must* be filed with the filing of the assignment.

Form 3200-17
(March 1975)

UNITED STATES
DEPARTMENT OF THE INTERIOR
BUREAU OF LAND MANAGEMENT

Serial No. N-17283

New Serial No. Same

ASSIGNMENT AFFECTING RECORD TITLE
TO GEOTHERMAL RESOURCES LEASE
PART I

W. M. Hughes
618 Fair Foundation Bldg.
Tyler, Texas 75702

RECEIVED
BUR OF LAND MANAGEMENT
NEVADA STATE OFFICE
1978 APR 26 AM 11 0

The undersigned, as owner of 100 percent of record title of the above-designated geothermal resources lease issued effective *(date)* Nov. 1, 1977, hereby transfers and assigns to the assignee shown above, the record title interest in and to such lease as specified below.

2. Describe the lands affected by this assignment *(43 CFR 3241.2-5)*

T 24 N, R 36 E, Mount Diablo Meridian, Nevada
Sec. 19; Lots 1, 2, 3, 4, E 1/2, E1/2 W 1/2 (ALL)
Sec. 20 ALL
Sec. 21, ALL
Sec. 22, ALL
Total Area: 2,542.92 Churchill County

3. What part of assignor(s) record title interest is being conveyed to assignee? *(Give percentage or share)* 73.5%

4. What part of the record title interest is being retained by assignor(s)? 26.5%

5a. What overriding royalty or production payments is the assignor reserving herein? *(See Item 4 of General Instructions; specify percentage; no assignment will be approved which does not comply with 43 CFR 3231.7-2 on limitation of overriding royalties)* -0-

b. What overriding royalties or production payments, if any, were previously reserved or conveyed? *(Percentage only)* -0-

It is agreed that the obligation to pay any overriding royalties or payments out of production of geothermal resources created herein, which, when added to overriding royalties or payments out of production previously created, aggregate in excess of 50 percent, of the rate of royalty due the United States, shall be suspended.

CERTIFY That the statements made herein are true, complete, and correct to the best of my knowledge and belief and are made in good faith.

Executed this 21st day of April, 1978

MILLICAN OIL COMPANY

By [signature], President
(Assignor's Signature)

Suite 400 - 908 Town & Country Blvd.
(Assignor's Address)

Houston TX 77024
(City) (State) (Zip Code)

Title 18 U.S.C., Section 1001, makes it a crime for any person knowingly and willfully to make to any department or agency of the United States any false, fictitious, or fraudulent statements or representations as to any matter within its jurisdiction.

THE UNITED STATES OF AMERICA

Assignment approved as to the lands described below:

Same as item #2.

Assignment approved effective August 1, 1978

By Roger A. Jarrell
(Authorized Officer)

Chief, Lands & Minerals Operations 7/31/78
(Title) (Date)

PART II

ASSIGNEE'S REQUEST FOR APPROVAL OF ASSIGNMENT

A. ASSIGNEE CERTIFIES THAT

1. Assignee is qualified to hold a geothermal resources lease under 43 CFR 3202.1
2. Assignee is [X] Individual [ ] Municipality [ ] Association [ ] Corporation
3. Assignee is the sole party in interest in this assignment *(information as to interests of other parties in this assignment must be furnished as prescribed in Specific Instructions)*
4. Filing fee of $50 is attached *(See Item 2 of General Instructions)*
5. Assignee's interests, direct and indirect, in geothermal resources leases, do not exceed 20,480 chargeable acres *(43 CFR 3201.2)*

B. ASSIGNEE AGREES to be bound by the terms and provisions of the lease described here, provided the assignment is approved by the Authorized Officer.

C. IT IS HEREBY CERTIFIED That the statements made herein are true, complete, and correct to the best of undersigned's knowledge and belief and are made in good faith.

Executed this 21st day of April, 19 78

W. M. Hughes
(Assignee's Signature)

W. M. Hughes

618 Fair Foundation Bldg.
Tyler, Texas 75702

(Address, include zip code)

Title 18 U.S.C., Section 1001, makes it a crime for any person knowingly and willfully to make to any department or agency of the United States any false, fictitious, or fraudulent statements or representations as to any matter within its jurisdiction.

GENERAL INSTRUCTIONS

1. *Use of form* — Use only for assignment of record title interest in geothermal resources leases, *and for assignments of working or royalty interests, operating agreements, or subleases.* An assignment of record title may only cover lands in *one* lease. If more than one assignment is made out of a lease, file a separate instrument of transfer with *each* assignment.

2. *Filing and number of copies* — File three (3) completed and manually signed copies in proper BLM office. A $50 nonrefundable filing fee *must* accompany assignment. File assignment within ninety (90) days *after* date of final execution.

3. *Effective date of assignment* — Assignment, if approved, takes effect on the first day of the month following the date of filing of *all* required papers.

4. *Overriding royalties or payments out of production* — Describe in an accompanying statement any overriding royalties or payments out of production created by assignment but not set out therein. If payments out of production are reserved by assignor, outline in detail the amount, method of payment, and other pertinent terms.

5. *Effect of assignment* — Approval of assignment of a definitely described portion of the leased lands creates separate leases. Assignee, upon approval of assignment, becomes lessee of the Government as to the assigned interest and is responsible for complying with *all* lease terms and conditions, including timely payment of annual rental and maintenance of any required bond; *except* in the case of assignment of undivided interests, royalties, and operating agreements.

6. A copy of the executed lease, out of which this assignment is made, should be made available to assignee by assignor.

SPECIFIC INSTRUCTIONS

(Items not specified are self-explanatory)

PART I

Item 1 — Type or print plainly, in ink, between and below heavy dots, the assignee's full name and mailing address, including zip code.

PART II

A. Certification of assignee

3. If assignee is an association or partnership, assignee *must* furnish a certified copy of its articles of association or partnership, with a statement that (a) it is authorized to hold geothermal resources leases; (b) that the person executing the assignment is authorized to act on behalf of the organization in such matters; and (c) names and addresses of members controlling more than 10 percent interest.

If assignee is a corporation, it *must* submit a statement containing the following information: (a) State in which it was incorporated; (b) that it is authorized to hold geothermal resources leases; (c) that officer executing assignment is authorized to act on behalf of the corporation in such matters; and (d) percentage of voting stock and percentage of *all* stock owned by aliens or those having addresses outside the United States. If 10 percent or more of the stock of any class is owned or controlled by or on behalf of any one stockholder, a separate showing of his citizenship and holdings *must* be furnished.

If evidence of qualifications and ownership has previously been furnished as required by the above, reference by serial number of record in which it was filed together with a statement as to any amendments. Qualifications of assignee *must* be in full compliance with the regulations (43 CFR 3241.1–2).

4. *Statement of interests* — Assignee *must* indicate whether or not he is the sole party in interest in the assignment; if not, assignee *must* submit, at time assignment is filed, a signed statement giving the names of other interested parties. If there are other parties interested in the assignment, a separate statement *must* be signed by each assignee, giving the nature and extent of the interest of each, the nature of agreement between them, if oral; and a copy of agreement, if written. *All* interested parties *must* furnish evidence of their qualifications to hold such lease interests. Separate statements and written agreements, if any, *must* be filed with the filing of the assignment.

STATEMENT OF PRIMARY ASSIGNEE

RECEIVED
BUR. OF LAND MANAGEMENT
NEVADA STATE OFFICE
1978 AUG 25 AM 11 08 2

I, W.M. HUGHES, being named Assignee in the Assignment of Geothermal Resources Lease to which this statement is attached, certify that the interests involved in the beneficial ownership of this lease are as follows:

Jerry H. Clay	43%
W.M. Hughes	43%
James W. Knowles	14%

W. M. Hughes

STATEMENT OF PARTY IN INTEREST

The undersigned party in interest in that certain Assignment of Geothermal Resources Lease to which this statement is attached does hereby certify that:

1) He is qualified to hold a Geothermal Resources Lease under 43 CFR 3202.1.
2) He is an individual.
3) He is a 43% party in interest as to the beneficial ownership under said Assignment.
4) His interests either direct or indirect in Geothermal Resources Leases do not exceed 20,480 chargeable acres.
5) He agrees to be bound by the terms and provisions of the lease described herein.
6) He certifies that the statements made herein are true, complete, and correct to the best of his knowledge and belief and are made in good faith.

RECEIVED
BUR OF LAND MANAGEMENT
NEVADA STATE OFFICE
19 APR 21 AM 08 2

Jerry H. Clay

Jerry H. Clay

STATEMENT OF PARTY IN INTEREST

The undersigned party in interest in that certain Assignment of Geothermal Resources Lease to which this statement is attached does hereby certify that:

1) He is qualified to hold a Geothermal Resources Lease under 43 CFR 3202.1.
2) He is an individual.
3) He is a 14% party in interest as to the beneficial ownership under said Assignment.
4) His interests either direct or indirect in Geothermal Resources Leases do not exceed 20,480 chargeable acres.
5) He agrees to be bound by the terms and provisions of the lease described herein.
6) He certifies that the statements made herein are true, complete, and correct to the best of his knowledge and belief and are made in good faith.

RECEIVED
BUR OF LAND MANAGEMENT
NEVADA STATE OFFICE
1978 AUG 26 AM 11 08

James W. Knowles

James W. Knowles

Form 3200-21
(May 1974)

UNITED STATES
DEPARTMENT OF THE INTERIOR
BUREAU OF LAND MANAGEMENT

Serial Number N-17283

USGS – KGRA Determination:

RECEIVED
Bur of Land Management
SEP 26 1977
10:00 A. M.

RECEIVED
Bureau of Land Management
OCT 19 1977

NEVADA STATE OFFICE
RENO, NEVADA

GEOTHERMAL RESOURCES LEASE

[X] Competitive [ ] Noncompetitive

In consideration of the terms and conditions contained herein, and the grant made hereby, this lease is entered into by the UNITED STATES OF AMERICA (hereinafter called the "Lessor"), acting through the Bureau of Land Management (hereinafter called the "Bureau") of the Department of the Interior (hereinafter called the "Department"), and

Millican Oil Company, 908 Town & Country Blvd., Suite 400, Houston, TX 77024

(hereinafter called the "Lessee").

This lease is made pursuant to the Geothermal Steam Act of 1970 (84 Stat. 1566; 30 U.S.C. 1001–1025) (hereinafter called "the Act") to be effective on NOV 01 1977 (hereinafter called the "effective date"). It is subject to all the provisions of the Act and to all the terms, conditions, and requirements of (a) all regulations promulgated by the Secretary of the Interior (hereinafter called "the Secretary") in existence upon the effective date, specifically including, but not limited to, 43 CFR Parts 3000 and 3200 and 30 CFR Parts 270 and 271, (b) all geothermal resources operational orders (hereinafter called "GRO orders") issued pursuant thereto, all of which are incorporated herein and by reference made a part hereof, and (c) any regulations hereafter issued by the Secretary (except those inconsistent with any specific provisions of this lease other than regulations incorporated herein by reference) all of which shall be, upon their effective date, incorporated herein and, by reference, made a part hereof.

Sec. 1. GRANT – The Lessor hereby grants and leases to the Lessee the exclusive right and privilege to drill for, extract, produce, remove, utilize, sell, and dispose of geothermal steam and associated geothermal resources, (hereinafter called "geothermal resources"), in or under the following described lands situated within the County of Churchill, State of Nevada:

National Resource Lands	Acquired Lands
T. 24 N. ; R. 36 E. ; Mt. Diablo Meridian	T. ; R. ; Meridian
sec. 19: Lots 1,2,3,4, E½, E½W½ (All);	
sec. 20: All;	
sec. 21: All;	
sec. 22: All.	
Total Area 2,542.92	Total Area

Containing 2,542.92 acres (hereinafter called the "leased area" or "leased lands"), together with:

(a) The nonexclusive right to conduct within the leased area geological and geophysical exploration in accordance with applicable regulations; and

(b) The right to construct or erect and to use, operate, and maintain within the leased area, together with ingress and egress thereupon all wells, pumps, pipes, pipelines, buildings, plants, sumps, brine pits, reservoirs, tanks, waterworks, pumping stations, roads, electric power generating plants, transmission lines, industrial facilities, electric, telegraph or telephone lines, and such other works and structures and to use so much of the surface of the land as may be necessary or reasonably convenient for the production, utilization, and processing of geothermal resources or to the full enjoyment of the rights granted by this lease, subject to compliance with applicable laws and regulations; *Provided that*, although the use of the leased area for an electric power generating plant or transmission facilities or a commercial or industrial facility is authorized hereunder, the location of such facilities and the terms of occupancy therefor shall be under separate instruments issued under any applicable laws and regulations; and

(c) The nonexclusive right to drill potable water wells in accordance with state water laws within the leased area and to use the water produced therefrom for operations on the leased lands free of cost, provided that such drilling and development are conducted in accordance with procedures approved by the Supervisor of the Geological Survey (hereinafter called "Supervisor"); and

(d) The right to convert this lease to a mineral lease under the Mineral Leasing Act of February 25, 1920, as amended, and supplemented (30 U.S.C. 181–287) or under the Mineral Leasing Act for Acquired Lands (30 U.S.C. 351–359), whichever is appropriate, if the leasehold is primarily valuable for the production of one or more valuable by-products which are leasable under those statutes, and the lease is incapable of commercial production or utilization of geothermal steam: *Provided that*, an application is made therefor prior to the expiration of the lease extension by reason of by-product production as hereinafter provided, and subject to all the terms and conditions of said appropriate Acts. The Lessee is also granted the right to locate mineral deposits under the mining laws (30 U.S.C. 21–54), which would constitute by-products if commercial production or utilization of geothermal steam continued, but such a location to be valid must be completed within ninety (90) days after the termination of this lease. Any conversion of this lease to a mineral lease or a mining claim is contingent on the availability of such lands for this purpose at the time of the conversion. If the lands are withdrawn or acquired in aid of a function of any Federal Department or agency, the mineral lease or mining claim shall be subject to such additional terms and conditions as may be prescribed by such Department or agency for the purpose of making operations thereon consistent with the purposes for which these lands are administered; and

(e) The right, without the payment of royalties hereunder, to reinject into the leased lands geothermal resources and condensates to the extent that such resources and condensates are not utilized, but their reinjection is necessary for operations under this lease in the recovering or processing of geothermal resources. If the Lessee, pursuant to any approved plan, disposes of the unusable brine and produced waste products into underlying formations, he may do so without the payment of royalties.

Sec. 2. TERM

(a) This lease shall be for a primary term of ten (10) years from the effective date and so long thereafter as geothermal steam is produced or utilized in commercial quantities but shall in no event continue for more than forty (40) years after the end of the primary term. However, if at the end of that forty-year period geothermal steam is being produced or utilized in commercial quantities, and the leased lands are not needed for other purposes, the Lessee shall have a preferential right to a renewal of this lease for a second forty-year term in accordance with such terms and conditions as the Lessor deems appropriate.

(b) If actual drilling operations are commenced on the leased lands or under an approved plan or agreement on behalf of the leased lands prior to the end of the primary term, and are being diligently prosecuted at the end of the primary term, this lease shall be extended for five (5) years and so long thereafter, but not more than thirty-five (35) years, as geothermal steam is produced or utilized in commercial quantities. If at the end of such extended term geothermal steam is being produced or utilized in commercial quantities, the Lessee shall have a preferential right to a renewal for a second term as in (a) above.

(c) If the Lessor determines at any time after the primary term that this lease is incapable of commercial production and utilization of geothermal steam, but one or more valuable by-products are or can be produced in commercial quantities, this lease shall be extended for so long as such by-products are produced in commercial quantities but not for more than five (5) years from the date of such determination.

01887601

Sec. 3. RENTALS AND ROYALTIES

(a) *Annual Rental* – For each lease year prior to the commencement of production of geothermal resources in commercial quantities on the leased lands, the Lessee shall pay the Lessor on or before the anniversary date of the lease a rental of $2.00 for each acre or fraction thereof.

(b) *Escalating Rental* – Beginning with the sixth lease year and for each year thereafter until the lease year beginning on or after the commencement of production of geothermal resources in commercial quantities, the Lessee shall pay on or before the anniversary date of the lease an escalated rental in an amount per acre or fraction thereof equal to the rental per acre for the preceding year and an additional sum of one (1) dollar per acre or fraction thereof. If the lease is extended beyond ten (10) years for reasons other than the commencement of production of geothermal resources in commercial quantities, the rental for the eleventh year and for each lease year thereafter until the lease year beginning on or after the commencement of such production will be the amount of rental for the tenth lease year. If any expenditures are made in any lease year for diligent exploration on the leased lands in excess of the minimum required expenditures for that year, the excess may be credited against any rentals in excess of $ 2.00 per acre or fraction thereof due the Lessor for that or any future year.

(c) *Royalty* – On or before the last day of the calendar month after the month of commencement of production in commercial quantities of geothermal resources and thereafter on a monthly basis, the Lessee shall pay to the Lessor:

(1) A royalty of 10 percent on the amount or value of steam, or any other form of heat or other associated energy produced, processed, removed, sold, or utilized from this lease or reasonably susceptible to sale or utilization by the Lessee.

(2) A royalty of 5 percent of the value of any by-product derived from production under this lease, produced, processed, removed, sold, or utilized from this lease or reasonably susceptible of sale or utilization by the Lessee, except that as to any by-product which is a mineral named in Sec. 1 of the Mineral Leasing Act of February 25, 1920, as amended, (30 U.S.C. 181), the rate of royalty for such mineral shall be the same as that provided in that statute and the maximum rate of royalty for such mineral shall not exceed the maximum royalty applicable under that statute.

(3) A royalty of 5 percent of the value of commercially demineralized water which has been produced from the leased lands, and has been sold or utilized by the Lessee or is reasonably susceptible of sale or utilization by the Lessee. In no event shall the Lessee pay to the Lessor, for the lease year beginning on or after the commencement of production in commercial quantities on the leased lands or any subsequent lease year, a royalty of less than two (2) dollars per acre or fraction thereof. If royalty paid on production during the lease year has not satisfied this requirement, the Lessee shall pay the difference on or before the expiration date of the lease year for which it is paid.

(d) *Waiver and Suspension of Rental and Royalties* – Rentals or royalties may be waived, suspended, or reduced pursuant to the applicable regulations on the entire leasehold or any portion thereof in the interest of conservation or for the purpose of encouraging the greatest ultimate recovery of geothermal resources if the Lessor determines that it is necessary to do so to promote such development, or because the lease cannot be successfully operated under the terms fixed herein.

(e) *Undivided Fractional Interests* – Where the interest of the Lessor in the geothermal resources underlying any tract or tracts described in Sec. 1 is an undivided fractional interest, the rentals and royalties payable on account of each such tract shall be in the same proportion to the rentals and royalties provided in this lease as the individual fractional interest of the Lessor in the geothermal resources underlying such tract is to the full fee interest.

(f) *Readjustments* – Rentals and royalties hereunder may be readjusted in accordance with the Act and regulations to rates not in excess of the rates provided therein, and at not less than twenty (20) year intervals beginning thirty-five (35) years after the date geothermal steam is produced from the lease as determined by the Supervisor.

Sec. 4. PAYMENTS – It is expressly understood that the Secretary may establish the values and minimum values of geothermal resources to compute royalties in accordance with the applicable regulations. Unless otherwise directed by the Secretary, all payments to the Lessor will be made as required by the regulations. If there is no well on the leased lands capable of producing geothermal resources in commercial quantities, the failure to pay rental on or before the anniversary date shall cause the lease to terminate by operation of law except as provided by Sec. 3244.2 of the regulations. If the time for payment falls on a day on which the proper office to receive payment is closed, payment shall be deemed to be made on time if made on the next official working day.

Sec. 5. BONDS – The Lessee shall file with the Authorized Officer of the Bureau (hereinafter called the "Authorized Officer") shall maintain at all times the bonds required under the regulations to be furnished as a condition to the issuance of this lease or prior to entry on the leased lands in the amounts established by the Lessor and to furnish such additional bonds or security as may be required by the Lessor upon entry on the lands or after operations or production have begun.

Sec. 6. WELLS

(a) The Lessee shall drill and produce all wells necessary to protect the leased land from drainage by operations on lands not the property of the Lessor, or other lands of the Lessor leased at a lower royalty rate, or or ds as to which royalties and rentals are paid into differen nds from those into which royalties under this lease are paid. However, in lieu of any part of such drilling and production, with the consent of the Supervisor, the Lessee may compensate the Lessor in full each month for the estimated loss of royalty through drainage in the amount determined by said Supervisor.

(b) At the Lessee's election, and with the approval of the Supervisor, the Lessee shall drill and produce other wells in conformity with any system of well spacing or production allotments affecting the field or area in which the leased lands are situated, which is authorized by applicable law.

(c) After due notice in writing, the Lessee shall diligently drill and produce such wells as the Supervisor shall require so that the leased lands may be properly and timely developed and for the production of geothermal steam and its by-products, including commercially demineralized water for beneficial uses in accordance with applicable state laws. However, the Supervisor may waive or modify the requirements of this subparagraph (c) in the interest of conservation of natural resources or for economic feasibility or other reasons satisfactory to him. If the products or by-products of geothermal production from wells drilled on this lease are susceptible of producing commercially demineralized water for beneficial uses, and a program therefor is not initiated with due diligence, the Lessor may at its option elect to take such products or by-products and the Lessee shall deliver all or any portion thereof to the Lessor at any point in the Lessee's geothermal gathering or disposal system without cost to the Lessee, if the Lessee's activities, under the lease, would not be impaired and such delivery would otherwise be consistent with field and operational requirements. The retention of this option by the Lessor shall in no way relieve the Lessee from the duty of producing commercially demineralized water where required to do so by the Lessor, except when the option is being exercised and then only with respect to wells where it is being exercised, or limit the Lessor's right to take any action under Sec. 25 to enforce that requirement.

Sec. 7. INSPECTION – The Lessee shall keep open at all reasonable times for the inspection of any duly authorized representative of the Lessor the leased lands and all wells, improvements, machinery, and fixtures thereon and all production reports, maps, records, books, and accounts relative to operations under the lease, and well logs, surveys, or investigations of the leased lands.

Sec. 8. CONDUCT OF OPERATIONS – The Lessee shall conduct all operations under this lease in a workmanlike manner and in accordance with all applicable statutes, regulations, and GRO orders, and all other appropriate directives of the Lessor to prevent bodily injury, danger to life or health, or property damage, and to avoid the waste of resources, and shall comply with all requirements which are set forth in 43 CFR Group 3200, including, but not limited to, Subpart 3204, or which may be prescribed by the Lessor pursuant to the regulations, and with the special stipulations which are attached to the lease, all of which are specifically incorporated into this lease. A breach of any term of this lease, including the stipulations attached hereto, will be subject to all the provisions of this lease with respect to remedies in case of default. Where any stipulation is inconsistent with a regular provision of this lease, the stipulation shall govern.

Sec. 9. INDEMNIFICATION

(a) The Lessee shall be liable to the Lessor for any damage suffered by the Lessor in any way arising from or connected with the Lessee's activities and operations conducted pursuant to this lease, except where damage is caused by employees of the Lessor acting within the scope of their authority.

(b) The Lessee shall indemnify and hold harmless the Lessor from all claims arising from or connected with the Lessee's activities and operations under this lease.

(c) In any case where liability without fault is imposed on the Lessee pursuant to this section, and the damages involved were caused by the action of a third party, the rules of subrogation shall apply in accordance with the law of the jurisdiction where the damage occurred.

Sec. 10. CONTRACTS FOR SALE OR DISPOSAL OF PRODUCTS – The Lessee shall file with the Supervisor not later than thirty (30) days after the effective date thereof any contract, or evidence of other arrangement for the sale or disposal of geothermal resources.

Sec. 11. ASSIGNMENT OF LEASE OR INTEREST THEREIN – Within ninety (90) days from the date of execution thereof, the Lessee shall file for approval by the Authorized Officer any instruments of transfer made of this lease or of any interest therein, including assignments of record title and working or other interests.

Sec. 12. REPORTS AND OTHER INFORMATION – At such times and in such form as the Lessor may prescribe, the Lessee shall comply with all reporting requirements of the geothermal resources leasing, operating, and unit regulations and shall submit quarterly reports containing the data which it has collected through the monitoring of air, land, and water quality and all other data pertaining to the effect on the environment by operations under the lease. The Lessee shall also comply with such other reporting requirements as may be imposed by the Authorized Officer or the Supervisor. The Lessor may release to the general public any reports, maps, or other information submitted by the Lessee except geologic and geophysical interpretations, maps, or data subject to 30 CFR 270.79 or unless the Lessee shall designate that information as proprietary and the Supervisor or the Authorized Officer shall approve that designation.

Sec. 13. DILIGENT EXPLORATION – In the manner required by the regulations, the Lessee shall diligently explore the leased lands for geother l resources until there is production in commercial quantiti pplicable to this lease. After the fifth year of the primary term the Lessee shall make at least

the minimum expenditures required to qualify the operations on the leased lands as diligent exploration under the regulations.

Sec. 14. PROTECTION OF THE ENVIRONMENT (LAND, AIR AND WATER) AND IMPROVEMENTS – The Lessee shall take all mitigating actions required by the Lessor to prevent: (a) soil erosion or damage to crops or other vegetative cover on Federal or non-Federal lands in the vicinity; (b) the pollution of land, air, or water; (c) land subsidence, seismic activity, or noise emissions; (d) damage to aesthetic and recreational values; (e) damage to fish or wildlife or their habitats; (f) damage to or removal of improvements owned by the United States or other parties; or (g) damage to or destruction or loss of fossils, historic or prehistoric ruins, or artifacts. Prior to the termination of bond liability or at any other time when required and to the extent deemed necessary by the Lessor, the Lessee shall reclaim all surface disturbances as required, remove or cover all debris or solid waste, and, so far as possible, repair the offsite and onsite damage caused by his activity or activities incidental thereto, and return access roads or trails and the leased lands to an acceptable condition including the removal of structures, if required. The Supervisor or the Authorized Officer shall prescribe the steps to be taken by Lessee to protect the surface and the environment and for the restoration of the leased lands and other lands affected by operations on the leased lands and improvements thereon, whether or not the improvements are owned by the United States. Timber or mineral materials may be obtained only on terms and conditions imposed by the Authorized Officer.

Sec. 15. WASTE – The Lessee shall use all reasonable precautions to prevent waste of natural resources and energy, including geothermal resources, or of any minerals, and to prevent the communication of water or brine zones with any oil, gas, fresh water, or other gas or water bearing formations or zones which would threaten destruction or damage to such deposits. The Lessee shall monitor noise, air, and water quality conditions in accordance with any orders of the Supervisor.

Sec. 16. MEASUREMENTS – The Lessee shall gauge or otherwise measure all production, sales, or utilization of geothermal resources and shall record the same accurately in records as required by the Supervisor. Reports on production, sales, or utilization of geothermal resources shall be submitted in accordance with the terms of this lease and the regulations.

Sec. 17. RESERVATIONS TO LESSOR – All rights in the leased area not granted to the Lessee by this lease are hereby reserved to the Lessor. Without limiting the generality of the foregoing such reserved rights include:

(a) *Disposal* – The right to sell or otherwise dispose of the surface of the leased lands or any resource in the leased lands under existing laws, or laws hereafter enacted, subject to the rights of the Lessee under this lease;

(b) *Rights-of-way* – The right to authorize geological and geophysical explorations on the leased lands which do not interfere with or endanger actual operations under this lease, and the right to grant such easements or rights-of-way for joint or several use upon, through or in the leased area for steam lines and other public or private purposes which do not interfere with or endanger actual operations or facilities constructed under this lease;

(c) *Mineral Rights* – The ownership of and the right to extract oil, hydrocarbon gas, and helium from all geothermal steam and associated geothermal resources produced from the leased lands;

(d) *Casing* – The right to acquire the well and casing at the fair market value of the casing where the Lessee finds only potable water, and such water is not required in lease operations; and

(e) *Measurements* – The right to measure geothermal resources and to sample any production thereof.

Sec. 18. ANTIQUITIES AND OBJECTS OF HISTORIC VALUE – The Lessee shall immediately bring to the attention of the Authorized Officer any antiquities or other objects of historic or scientific interest, including but not limited to historic or prehistoric ruins, fossils, or artifacts discovered as a result of operations under this lease, and shall leave such discoveries intact. Failure to comply with any of the terms and conditions imposed by the Authorized Officer with regard to the preservation of antiquities may constitute a violation of the Antiquities Act (16 U.S.C. 431-433). Prior to operations, the Lessee shall furnish to the Authorized Officer a certified statement that either no archaeological values exist or that they may exist on the leased lands to the best of the of the Lessee's knowledge and belief and that they might be impaired by geothermal operations. If the Lessee furnishes a statement that archaeological values may exist where the land is to be disturbed or occupied, the Lessee will engage a qualified archaeologist, acceptable to the Authorized Officer, to survey and salvage, in advance of any operations, such archeological values on the lands involved. The responsibility for the cost for the certificate, survey, and salvage will be borne by the Lessee, and such salvaged property shall remain the property of the Lessor or the surface owner.

Sec. 19. DIRECTIONAL DRILLING – A directional well drilled under the leased area from a surface location on nearby land not covered by the lease shall be deemed to have the same effect for all purposes of this lease as a well drilled from a surface location on the leased area. In such circumstances, drilling shall be considered to have been commenced on the nearby land for the purposes of this lease, and production of geothermal resources from the leased area through any directional well located on nearby land, or drilling or reworking of any such directional well shall be considered production or drilling or reworking operations (as the case may be) on the leased area for all purposes of this lease. Nothing contained in this section shall be construed as granting to the Lessee any right in any land outside the leased area.

Sec. 20. OVERRIDING ROYALTIES – The Lessee shall not create overriding royalties of less than one-quarter (1/4) of one percent of the value of output nor in excess of 50 percent of the rate of royalty due to the Lessor specified in Sec. 3 of this lease except as otherwise authorized by the regulations. The Lessee expressly agrees that the creation of any overriding royalty which does not provide for a prorated reduction of all overriding royalties so that the aggregate rate of royalties does not exceed the maximum rate permissible under this section, or the failure to suspend an overriding royalty during any period when the royalties due to the Lessor have been suspended pursuant to the terms of this lease, shall constitute a violation of the lease terms.

Sec. 21. READJUSTMENT OF TERMS AND CONDITIONS – The terms and conditions of this lease other than those related to rentals and royalties may be readjusted in accordance with the Act at not less than ten-year intervals beginning ten (10) years after the date geothermal steam is produced from the leased premises as determined by the Supervisor.

Sec. 22. COOPERATIVE OR UNIT PLAN – The Lessee agrees that it will on its own, or at the request of the Lessor where it is determined to be necessary for the conservation of the resource or to prevent the waste of the resource, subscribe to and operate under any reasonable cooperative or unit plan for the development and operation of the area, field, or pool, or part thereof embracing the lands subject to this lease as the Secretary may determine to be practicable and necessary or advisable in the interest of conservation. In the event the leased lands are included within a unit, the terms of this lease shall be deemed to be modified to conform to such unit agreement. Where any provision of a cooperative or unit plan of development which has been approved by the Secretary, and which by its terms affects the leased area or any part thereof, is inconsistent with a provision of this lease, the provisions of such cooperative or unit plan shall govern.

Sec. 23. RELINQUISHMENT OF LEASE – The Lessee may relinquish this entire lease or any officially designated subdivision of the leased area in accordance with the regulations by filing in the proper BLM office a written relinquishment, in triplicate, which shall be effective as of the date of filing. No relinquishment of this lease or any portion of the leased area shall relieve the Lessee or its surety from any liability for breach of any obligation of this lease, including the obligation to make payment of all accrued rentals and royalties and to place all wells in the leased lands to be relinquished in condition for suspension or abandonment, and to protect or restore substantially the surface or subsurface resources in a manner satisfactory to the Lessor.

Sec. 24. REMOVAL OF PROPERTY ON TERMINATION OR EXPIRATION OF LEASE

(a) Upon the termination or expiration of this lease in whole or in part, or the relinquishment of the lease in whole or in part, as herein provided, the Lessee shall within a period of ninety (90) days (or such longer period as the Supervisor may authorize because of adverse climatic conditions) thereafter remove from the leased lands, no longer subject to the lease all structures, machinery, equipment, tools, and materials in accordance with applicable regulations and orders of the Supervisor. However, the Lessee shall, for a period of not more than six (6) months, continue to maintain any such property needed in the relinquished area, as determined by the Supervisor, for producing wells or for drilling or producing geothermal resources on other leases.

(b) Any structures, machinery, equipment, tools, appliances, and materials, subject to removal by the Lessee, as provided above, which are allowed to remain on the leased lands shall become the property of the Lessor on expiration of the 90-day period or any extension of that period which may be granted by the Supervisor. If the Supervisor directs the Lessee to remove such property, the Lessee shall do so at its own expense, or if it fails to do so within a reasonable period, the Lessor may do so at the Lessee's expense.

Sec. 25. REMEDIES IN CASE OF DEFAULT

(a) Whenever the Lessee fails to comply with any of the provisions of the Act, or the terms and stipulations of this lease, or of the regulations issued under the Act, or of any order issued pursuant to those regulations, and that default shall continue for a period of thirty (30) days after service of notice by the Lessor, the Lessor may (1) suspend operations until the requested action is taken to correct the noncompliance, or (2) cancel the lease in accordance with Sec. 12 of the Act (30 U.S.C. 1011). However, the 30-day notice provision applicable to this lease under Sec. 12 of the Act shall also apply as a prerequisite to the institution of any legal proceedings by the Lessor to cancel this lease while it is in a producing status. Nothing in this subsection shall be construed to apply to, or require any notice with respect to any legal action instituted by the Lessor other than an action to cancel the lease pursuant to Sec. 12 of the Act.

(b) Whenever the Lessee fails to comply with any of the provisions of the Act, or of this lease, or the regulations, or of any GRO Orders, or other orders, and immediate action is required, the Lessor without waiting for action by the Lessee may enter on the leased lands and take such measures as it may deem necessary to correct the failure, including a suspension of operations or production, all at the expense of the Lessee.

(c) A waiver of any particular violation of the provisions of the Act, or of this lease, or of any regulations promulgated by the Secretary under the Act, shall not prevent the cancellation of this lease or the exercise of any other remedy or remedies under paragraphs (a) and (b) of this section by reason of any other such violation, or for the same violation occuring at any other time.

(d) Nothing herein shall limit or affect the Lessee's right to a hearing and appeal as provided in Sec. 12 of the

ct and in the regulations promulgated th. under.

(e) Upon cancellation, the Lessee shall remove all property in accordance with Sec. 24 hereof, and shall restore the leased lands in a manner acceptable to the Lessor or as may be otherwise required by the Lessor.

Sec. 26. HEIRS AND SUCCESSORS IN INTEREST – Each obligation hereunder shall extend to and be binding upon, and every benefit hereof shall inure to, the heirs, executors, administrators, successors, or assigns, of the respective parties hereto.

Sec. 27. UNLAWFUL INTEREST – No Member of, or Delegate to Congress, or Resident Commissioner, after his election or appointment, either before or after he has qualified, and during his continuance in office, and no officer, agent, or employee of the Department shall be admitted to any share or part in this lease or derive any benefit that may arise therefrom; and the provisions of Sec. 3741 of the Revised Statutes (41 U.S.C. Sec. 22), as amended, and Sections 431, 432, and 433 of Title 18 of the United States Code, relating to contracts made or entered into, or accepted by or on behalf of the United States, form a part of this lease so far as the same may be applicable.

Sec. 28. MONOPOLY AND FAIR PRICES – The Lessor reserves full power and authority to protect the public interest by promulgating and enforcing all orders necessary to insure the sale of the production from the leased lands at reasonable prices, to prevent monopoly, and to safeguard the public interest.

Sec. 29. EQUAL OPPORTUNITY CLAUSE – The Lessee agrees that, during the performance of this contract:

(1) The Lessee will not discriminate against any employee or applicant for employment because of race, color, religion, sex, or national origin. The Lessee will take affirmative action to ensure that applicants are employed, and that employees are treated during employment, without regard to their race, color, religion, sex, or national origin. Such action shall include, but not be limited to the following: employment, upgrading, demotion, or transfer; recruitment or recruitment advertising, layoff or termination; rates of pay or other forms of compensation; and selection for training, including apprenticeship. The Lessee agrees to post in conspicuous places, available to employees and applicants for employment, notices to be provided by the Lessor setting forth the provisions of this Equal Opportunity clause.

(2) The Lessee will, in all solicitations or advertisements for employees placed by or on behalf of the Lessee, state that all qualified applicants will receive consideration for employment without regard to race, color, religion, sex, or national origin.

(3) The Lessee will send to each labor union or representative of workers with which Lessee has a collective bargaining agreement or other contract or understanding, a notice, to be provided by the Lessor, advising the labor union or workers' representative of the Lessee's commitments under this Equal Opportunity clause, and shall post copies of the notice in conspicuous places available to employees and applicants for employment.

(4) The Lessee will comply with all provisions of Executive Order No. 11246 of September 24, 1965, as amended, and of the rules, regulations, and relevant orders of the Secretary of Labor.

(5) The Lessee will furnish all information and reports required by Executive Order No. 11246 of September 24, 1965, as amended, and by the rules, regulations, and orders of the Secretary of Labor, or pursuant thereto, and will permit access to its books, records, and accounts by the Secretary of the Interior and the Secretary of Labor for purposes of investigation to ascertain compliance with such rules, regulations, and orders.

(6) In the event of the Lessee's noncompliance with the Equal Opportunity clause of this lease or with any of said rules, regulations, or orders, this lease may be canceled, terminated or suspended in whole or in part and the Lessee may be declared ineligible for further Federal Government contracts or leases in accordance with procedures authorized in Executive Order No. 11246 of September 24, 1965, as amended, and such other sanctions as may be imposed and remedies invoked as provided in Executive Order No. 11246 of September 24, 1965, as amended, or by rule, regulation, or order of the Secretary of Labor, or as otherwise provided by law.

(7) The Lessee will include the provisions of Paragraphs (1) through (7) of this Section (29) in every contract, subcontract or purchase order unless exempted by rules, regulations, or orders of the Secretary of Labor issued pursuant to Section 204 of Executive Order No. 11246 of September 24, 1965, as amended, so that such provisions will be binding upon each contractor, subcontractor, or subcontract, or purchase order as the Secretary may direct as a means of enforcing such provisions including sanctions for noncompliance; *provided, however,* that in the event the Lessee becomes involved in, or is threatened with, litigation with a contractor, subcontractor, or vendor as a result of such direction by the Secretary, the Lessee may request the Lessor to enter into such litigation to protect the interests of the Lessor.

Sec. 30. CERTIFICATION OF NONSEGREGATED FACILITIES – By entering into this lease, the Lessee certifies that it does not and will not maintain or provide for its employees any segregated facilities at any of its establishments, and that it does not and will not permit its employees to perform their services at any location, under its control, where segregated facilities are maintained. The Lessee agrees that a breach of this certification is a violation of the Equal Opportunity clause of this lease. As used in this certification, the term "segregated facilities" means, but is not limited to, any waiting rooms, work areas, rest rooms and wash rooms, or restaurants or other eating areas, time clocks, or locker rooms, and other storage or dressing rooms, parking lots, drinking fountains, recreation or entertainment areas, transportation, and housing facilities provided for employees which are segregated by explicit directive, or are in fact segregated on the basis of race, color, religion, or national origin because of habit, local custom, or otherwise. Lessee further agrees that (except where it has obtained identical certifications from proposed contractors and subcontractors for specific time periods) it will obtain identical certifications from proposed contractors and subcontractors prior to the award of contracts or subcontracts exceeding $10,000 which are not exempt from the provisions of the Equal Opportunity clause; that it will retain such certifications in its files; and that it will forward the following certification to such proposed contractors and subcontractors (except where the proposed contractor or subcontractor has submitted identical certifications for specific time periods): it will notify prospective contractors and subcontractors of requirement for certification of nonsegregated facilities. A Certification of Nonsegregated Facilities, as required by the May 9, 1967 Order (32 F.R. 7439, May 19, 1967) on Elimination of Segregated Facilities, by the Secretary of Labor, must be submitted prior to the award of a contract or subcontract exceeding $10,000 which is not exempt from the provisions of the Equal Opportunity clause. The certification may be submitted either for each contract and subcontract or for all contracts and subcontracts during a period (i.e., quarterly, semiannually, or annually).

Sec. 31. SPECIAL STIPULATIONS – *(stipulations, if any, are attached hereto and made a part hereof)*

The attached Fort Churchill-Clan Alpine Special Stipulations apply to all lands within this lease.

In witness whereof the parties have executed this lease.

Lessee:
MILLICAN OIL COMPANY

BY: [signature]
(signature of Lessee)

ATTEST: [signature]
Secretary

September 22, 1977
(Date)

SEAL

THE UNITED STATES OF AMERICA, Lessor:

By Roger A. Darrell
(Authorized Officer)

Acting Chief, Lands & Minerals Operations
(Title)

OCT 26 1977
(Date)

GPO 853-471

act and in the regulations promulgated thereunder.

(e) Upon cancellation, the Lessee shall remove all property in accordance with Sec. 24 hereof, and shall restore the leased lands in a manner acceptable to the Lessor or as may be otherwise required by the Lessor.

Sec. 26. HEIRS AND SUCCESSORS IN INTEREST – Each obligation hereunder shall extend to and be binding upon, and every benefit hereof shall inure to, the heirs, executors, administrators, successors, or assigns, of the respective parties hereto.

Sec. 27. UNLAWFUL INTEREST – No Member of, or Delegate to Congress, or Resident Commissioner, after his election or appointment, either before or after he has qualified, and during his continuance in office, and no officer, agent, or employee of the Department shall be admitted to any share or part in this lease or derive any benefit that may arise therefrom; and the provisions of Sec. 3741 of the Revised Statutes (41 U.S.C. Sec. 22), as amended, and Sections 431, 432, and 433 of Title 18 of the United States Code, relating to contracts made or entered into, or accepted by or on behalf of the United States, form a part of this lease so far as the same may be applicable.

Sec. 28. MONOPOLY AND FAIR PRICES – The Lessor reserves full power and authority to protect the public interest by promulgating and enforcing all orders necessary to insure the sale of the production from the leased lands at reasonable prices, to prevent monopoly, and to safeguard the public interest.

Sec. 29. EQUAL OPPORTUNITY CLAUSE – The Lessee agrees that, during the performance of this contract:

(1) The Lessee will not discriminate against any employee or applicant for employment because of race, color, religion, sex, or national origin. The Lessee will take affirmative action to ensure that applicants are employed, and that employees are treated during employment, without regard to their race, color, religion, sex, or national origin. Such action shall include but not limited to the following: employment, upgrading, demotion, or transfer; recruitment or recruitment advertising; layoff or termination; rates of pay or other forms of compensation; selection for training, including apprenticeship. The Lessee will post in conspicuous places available to employees and applicants for employment notices to be provided by the contracting officer setting forth the provisions of this nondiscrimination clause.

(2) The Lessee will not discriminate against any employee or applicant for employment because of race, color, religion, sex, or national origin.

(3) The Lessee will send to each labor union or representative of workers with which he has a collective bargaining agreement or other contract or understanding, a notice, to be provided by the agency contracting officer, advising the labor union or workers' representative of the Lessee's commitments under this Section 29 of the Equal Opportunity clause and shall post copies of the notice in conspicuous places available to employees and applicants for employment.

(4) The Lessee will comply with all provisions of Executive Order No. 11246 of September 24, 1965, and of the rules, regulations, and relevant orders of the Secretary of Labor.

(5) The Lessee will furnish all information and reports required by Executive Order No. 11246 of September 24, 1965, and by rules, regulations, and orders of the Secretary of Labor, or pursuant thereto, and will permit access to its books, records, and accounts by the Secretary of the Interior and the Secretary of Labor for purposes of investigation to ascertain compliance with such rules, regulations, and orders.

(6) In the event of the Lessee's noncompliance with the Equal Opportunity clause of this lease or with any of said rules, regulations, or orders, this lease may be canceled, terminated or suspended in whole or in part and the Lessee may be declared ineligible for further Federal Government contracts or leases in accordance with procedures authorized in Executive Order No. 11246 of September 24, 1965, as amended, and such other sanctions as may be imposed and remedies invoked as provided in Executive Order No. 11246 of September 24, 1965, as amended, or by rule, regulation, or order of the Secretary of Labor, or as otherwise provided by law.

(7) The Lessee will include the provisions of Paragraphs (1) through (7) of this Section (29) in every contract, subcontract or purchase order unless exempted by rules, regulations, or orders of the Secretary of Labor issued pursuant to Section 204 of Executive Order No. 11246 of September 24, 1965, as amended, so that such provisions will be binding upon each contractor, subcontractor, or subcontract, or purchase order as the Secretary may direct as a means of enforcing such provisions including sanctions for noncompliance; *provided, however,* that in the event the Lessee becomes involved in, or is threatened with, litigation with a contractor, subcontractor, or vendor as a result of such direction by the Secretary, the Lessee may request the Lessor to enter into such litigation to protect the interests of the Lessor.

Sec. 30. CERTIFICATION OF NONSEGREGATED FACILITIES – By entering into this lease, the Lessee certifies that it does not and will not maintain or provide for its employees any segregated facilities at any of its establishments, and that it does not and will not permit its employees to perform their services at any location, under its control, where segregated facilities are maintained. The Lessee agrees that a breach of this certification is a violation of the

CORPORATION ACKNOWLEDGMENT

THE STATE OF TEXAS,
COUNTY OF HARRIS

BEFORE ME, the undersigned, a Notary Public in and for said County and State, on this day personally appeared ~~Thomas W. Clay, President~~ A. Ray Davis, Secretary, known to me to be the person and officer whose name is subscribed to the foregoing instrument and acknowledged to me that the same was the act of the said MILLICAN OIL COMPANY a corporation, and that he executed the same as the act of such corporation for the purposes and consideration therein expressed, and in the capacity therein stated.

GIVEN UNDER MY HAND AND SEAL OF OFFICE this the 22nd day of September A. D. 1977

(L. S.)

Doris J. Davis
Notary Public in and for Harris County, Texas

... or pursuant thereto, and will permit access to its books, records, and accounts by the Secretary or for all contracts and subcontracts during a period (i.e., quarterly, semiannually, or annually).

Sec. 31. SPECIAL STIPULATIONS – *(stipulations, if any, are attached hereto and made a part hereof)*

The attached Fort Churchill-Clan Alpine Special Stipulations apply to all lands within this lease.

In witness whereof the parties have executed this lease.

Lessee:
MILLICAN OIL COMPANY
BY: ~~Thomas W. Clay~~ A. Ray Davis
(signature of Lessee)
ATTEST: ~~Assistant Secretary~~ Secretary
September 22, 1977
SEAL (Date)

THE UNITED STATES OF AMERICA, Lessor:
By Roger A. Darrell
(Authorized Officer)
ACTING Chief, Lands & Minerals Operations
(Title)
OCT 26 1977
(Date)

GPO 853-471

FORT CHURCHILL-CLAN ALPINE
SPECIAL STIPULATIONS

The Lessee shall comply with the following special conditions and stipulations unless they are modified by mutual agreement of the Lessee, the Supervisor and the Authorized Officer:

1. Surface occupancy within 500 feet (horizontal measurement) of any canal, ditch, slough, pond, lake, spring, or open body of water may be restricted or denied where deemed necessary by the appropriate surface management agency to protect wildlife and other resources. Other buffer zones and areas of restricted surface occupancy may be required to protect other resource values, including but not limited to, critical or rare or endangered species habitat.

2. The certified statement required by Section 18 of the lease form must be completed by a qualified archaeologist, acceptable to the Authorized Officer.

3. The use of wide or balloon-tired vehicles and/or helicopters may be required for any activities in off-road areas where deemed necessary to protect the soil and other resources.

4. Springs and water developments on Federal lands may be used only with the prior written approval of the Authorized Officer.

RECEIVED
Bur of Land Management
OCT 19 1977
10:00 A.M.
NEVADA STATE OFFICE
RENO, NEVADA

In witness whereof the parties have executed this lease.

Lessee:
MILLICAN OIL COMPANY
BY: [signature]
(signature of Lessee)
ATTEST: [signature] Secretary
September 22, 1977
SEAL (Date)

THE UNITED STATES OF AMERICA, Lessor:
By Roger A. Darrell
(Authorized Officer)
Acting Chief, Lands & Minerals Operations
(Title)
OCT 26 1977
(Date)

GPO 883-471

Form 3000-3
(January 2010)

UNITED STATES
DEPARTMENT OF THE INTERIOR
BUREAU OF LAND MANAGEMENT

ASSIGNMENT OF RECORD TITLE INTEREST IN A LEASE FOR OIL AND GAS OR GEOTHERMAL RESOURCES

Mineral Leasing Act of 1920 (30 U.S.C. 181 et seq.)
Act for Acquired Lands of 1947 (30 U.S.C 351 - 359)
Geothermal Steam Act of 1970 (30 U.S.C. 1001 - 1025)
Department of the Interior Appropriations Act, Fiscal Year 1981 (42 U.S.C. 6508)

FORM APPROVED
OMB NO. 1004-0034
Expires: July 31, 2012

Lease Serial No.
N-61705

Lease Effective Date
(Anniversary Date)
06/01/1976

New Serial No.

Type or print plainly in ink and sign in ink.

PART A: ASSIGNMENT

1. Assignee* TGP Coyote Canyon, LLC
Street 9590 Prototype Court, Suite 200
City, State, Zip Code Reno, NV 89521-5916

1a. Assignor Terra-Gen Dixie Valley, LLC

*If more than one assignee, check here ☐ and list the name(s) and address(es) of all addtional assignees on page 2 of this form or on a separate attached sheet of paper.

This record title assignment is for: *(Check one)* ☐ Oil and Gas Lease, or ☑ Geothermal Lease

Interest conveyed: *(Check one or both, as appropriate)* ☑ Record Title, ☐ Overriding Royalty, payment out of production or other similar interests or payments

2. This assignment conveys the following interest:

Land Description	Percent of Interest			Percent of Overriding Royalty Similar Interests	
Additional space on page 2, if needed. Do not submit documents or agreements other than this form; such documents or agreements shall only be referenced herein.	Owned	Conveyed	Retained	Reserved	Previously reserved or conveyed
a	b	c	d	e	f
T24N-R36E, M.D.M. Sec. 24: NW4	100%	100%	0		

RECEIVED
NOV 17 2010
BLM NVSO IAC

FOR BLM USE ONLY - DO NOT WRITE BELOW THIS LINE

UNITED STATES OF AMERICA

This assignment is approved solely for administrative purposes. Approval does not warrant that either party to this assignment holds legal or equitable title to this lease.

☑ Assignment approved for above described lands;

☐ Assignment approved for attached land description

Assignment approved effective JAN 01 2011

☐ Assignment approved for land description indicated on reverse of this form

By Elaine Guerrero
Bureau of Land Management (BLM)

Chief, Branch of Minerals Adjudication
(Title)

DEC 17 2010
(Date)

(Continued on page 2)

Part A (Continued): ADDITIONAL SPACE for names and addresses of additional assignees in Item No.1, if needed, or for Land Description in Item No. 2, if needed.

RECEIVED
NOV 17 2010
BLM NVSO IAC

PART B - CERTIFICATION AND REQUEST FOR APPROVAL

1. The Assignor certifies as owner if an interest in the above designated lease that he/she hereby assigns to the above assignee(s) the rights specified above.

2. Assignee certifies as follows: (a) Assignee is a citizen of the United States; an association of such citizens; a municipality; or a corporation organized under the laws of the United States or of any State or territory thereof. For the assignment of NPR-A leases, assignee is a citizen, national, or resident alien of the United States or association of such citizens, nationals, resident aliens or private, public or municipal corporations, (b) Assignee is not considered a minor under the laws of the State in which the lands covered by this assignment are located; (c) Assignee's chargeable interests, direct and indirect, in each public domain and acquired lands separately in the same State, do not exceed 246,080 acres in oil and gas leases (of which up to 200,000 acres may be in oil and gas options), or 300,000 acres in leases in each leasing District in Alaska of which up to 200,000 acres may be in options, if this is an oil and gas lease issued in accordance with the Mineral Leasing Act of 1920, or 51,200 acres in any one State if this is a geothermal lease; (d) All parties holding an interest in the assignment are otherwise in compliance with the regulations (43 CFR Group 3100 or 3200) and the authorizing Acts; (e) Assignee is in compliance with reclamation requirements for all Federal oil and gas lease holdings as required by sec. 17(g) of the Mineral Leasing Act; and (f) Assignee is not in violation of sec. 41 of the Mineral Leasing Act.

3. Assignee's signature to this assignment constitutes acceptance of all applicable terms, conditions, stipulations and restrictions pertaining to the lease described herein.

For geothermal assignments, an overriding royalty may not be less than one-fourth (1/4) of one percent of the value of output, nor greater than 50 percent of the rate of royalty due to the United States when this assignment is added to all previously created overriding royalties (43 CFR 3241).

I certify that the statements made herein by me are true, complete, and correct to the best of my knowledge and belief and are made in good faith.

Executed this 10th day of November 20 10

Executed this 10th day of November 20 10

Name of Assignor as shown on current lease: Terra-Gen Dixie Valley, LLC
(Please type or print)

Assignor _____ (Signature)
or
Attorney-in-fact Vincent Signorotti (Signature)
Vice President

9590 Prototype Court, Suite 200
(Assignor's Address)
Reno (City) NV (State) 89521-5916 (Zip Code)

Assignee _____ (Signature)
or
Attorney-in-fact Bernard Roemy (Signature)
Vice President

Title 18 U.S.C. Sec.1001 makes it a crime for any person knowingly and willfully to make to any Department or agency of the United States any false, fictitious, or fraudulent statements or representations as to any matter within its jurisdiction.

(Continued on page 3)

Form 3200-24a
(September 2008)

UNITED STATES
DEPARTMENT OF THE INTERIOR
BUREAU OF LAND MANAGEMENT

OFFER TO LEASE AND LEASE FOR GEOTHERMAL RESOURCES
(For New Leases Issued Under the Energy Policy Act of 2005 [August 5, 2005])

Serial No.
N-61705

The undersigned (see page 2) offers to lease all or any of the lands in item 2 that are available for lease pursuant to the Geothermal Steam Act of 1970, as amended (30 U.S.C. 1001-1025).

READ INSTRUCTIONS BEFORE COMPLETING

1. Name	1a. Street	
Terra-Gen Dixie Valley LLC	9590 Prototype Court, Suite 200	
1b. City	1c. State	1d. Zip Code
Reno	NV	89521

2. Surface managing agency if other than BLM: _____ Unit/Project: _____

Legal description of land requested (segregate by public domain and acquired lands): Enter T., R., Meridian, State and County

Total Acres Applied for _____

Percent U.S. interest _____

Amount remitted: Processing Fee $ _____ Rental Fee $ _____ Total $ _____

DO NOT WRITE BELOW THIS LINE

3. Land included in lease: Enter T., R., Meridian, State and County

T. 24 N., R. 36 E., MDM NEVADA
sec. 24, NW.

Churchill County

REC'D - BLM - NSO
9:00 A.M. FEB 2 6 2010

Total Acres in Lease 160.00

Rental Retained $ _____

In accordance with the above offer, or the previously submitted competitive bid, this lease is issued granting the exclusive right to drill for, extract, produce, remove, utilize, sell, and dispose of all the geothermal resources in the lands described in Item 3 together with the right to build and maintain necessary improvements thereupon, for a primary term of 10 years and subsequent extensions thereof in accordance with 43 CFR subpart 3207. Rights granted are subject to: applicable laws; the terms, conditions, and attached stipulations of this lease; the Secretary of the Interior's regulations and formal orders in effect as of lease issuance; and, when not inconsistent with the provisions of this lease, regulations and formal orders hereafter promulgated.

Type of Lease:

- ☐ Competitive
- ☑ Noncompetitive
- ☐ Noncompetitive direct use (43 CFR subpart 3205)

Comments:

Per 43 CFR 3200.7(a)(2)
Conversion of all lease terms including royalty provisions.

THE UNITED STATES OF AMERICA

BY _____
(Signing Official)

ATANDA CLARK
(Printed Name)

Chief, Branch of Minerals Adjudication
(Title)

MAR - 1 2010
(Date)

EFFECTIVE DATE OF LEASE 06/01/1976

Check if this is a converted lease ☑

EFFECTIVE DATE OF LEASE CONVERSION 12/01/2008

(Continued on page 2)

4. (a) The undersigned certifies that:
(1) The offeror is a citizen of the United States; an association of such citizens; a municipality; or a corporation organized under the laws of the United States, any State or the District of Columbia; (2) All parties holding an interest in the offer are in compliance with 43 CFR part 3200 and the authorizing Act; (3) The offeror's chargeable interests, direct and indirect, do not exceed those allowed under the Act; and (4) The offeror is not considered a minor under the laws of the State in which the lands covered by this offer are located.
(b) The undersigned agrees that signing this offer constitutes acceptance of this lease, including all terms, conditions and stipulations of which the offeror has been given notice. The offeror further agrees that this offer cannot be withdrawn, either in whole or part, unless the withdrawal is received by the proper BLM State Office before this lease, an amendment to this lease, or a separate lease, whichever covers the land described in the withdrawal, has been signed on behalf of the United States.

This offer will be rejected and will afford the offeror no priority if it is not properly completed and executed in accordance with the regulations or if it is not accompanied by the required payments. Title 18 U.S.C. § 1001 makes it a crime for any person knowingly and willfully to make to any Department or agency of the United States any false, fictitious, or fraudulent statements or representations as to any matter within its jurisdiction.

Duly executed this 24th day of February, 2010 Vincent J. Signorotti (Printed Name of Lessee or Attorney-in-fact) (Signature of Lessee or Attorney-in-fact)

LEASE TERMS

Sec. 1. Rentals—Rentals must be paid to the proper office of the lessor in advance of each lease year. Annual rental rates per acre or fraction thereof, as applicable, are:
(a) Noncompetitive lease (includes post-sale parcels not receiving bids, a direct use lease or a lease issued to a mining claimant): $1.00 for the first 10 years; thereafter $5.00; or
(b) Competitive lease: $2.00 for the first year; $3.00 for the second through tenth year; thereafter $5.00.
Annual rental is always due by the anniversary date of this lease (43 CFR 3211.13), regardless of whether the lease is in a unit or outside of a unit, the lease is in production or not, or royalties or direct use fees apply to the production.
Rental may only be credited toward royalty under 43 CFR 3211.15 and 30 CFR 218.303. Rental may not be credited against direct use fees. Failure to pay annual rental timely will result in late fees and will make the lease subject to termination in accordance with 43 CFR 3213.14.

Sec. 2. (a) Royalties—Royalties must be paid to the proper office of the lessor. Royalties are due on the last day of the month following the month of production. Royalties will be computed in accordance with applicable regulations and orders. Royalty rates for geothermal resources produced for the commercial generation of electricity but not sold in an arm's length transaction are: 1.75 percent for the first 10 years of production and 3.5 percent after the first 10 years. The royalty rate is to be applied to the gross proceeds derived from the sale of electricity in accordance with 30 CFR part 206 subpart H.
The royalty rate for byproducts derived from geothermal resource production that are minerals specified in section 1 of the Mineral Leasing Act (MLA), as amended (30 U.S.C. 181), is 5 percent, except for sodium compounds, produced between September 29, 2006 and September 29, 2011 (Pub. L. No. 109-338, §102; note to 30 U.S.C. 362) for which the royalty rate is 2 percent. No royalty is due on byproducts that are not specified in 30 U.S.C. § 181. (43 CFR 3211.19.)
If this lease or a portion thereof is committed to an approved communitization or unit agreement and the agreement contains a provision for allocation of production, royalties must be paid on the production allocated to this lease.
(b) Arm's length transactions—The royalty rate for geothermal resources sold by you or your affiliate at arm's length to a purchaser is 10 percent of the gross proceeds derived from the arm's-length sale (43 CFR 3211.17, 3211.18).
(c) Advanced royalties—In the absence of a suspension, if you cease production for more than one calendar month on a lease that is subject to royalties and that has achieved commercial production, your lease will remain in effect only if you make advanced royalty payments in accordance with 43 CFR 3212.15(a) and 30 CFR 218.305.
(d) Direct use fees—Direct use fees must be paid in lieu of royalties for geothermal resources that are utilized for commercial, residential, agricultural, or other energy needs other than the commercial production or generation of electricity, but not sold in an arm's length transaction (43 CFR 3211.18; 30 CFR 206.356).
This requirement applies to any direct use of federal geothermal resources (unless the resource is exempted as described in 30 CFR 202.351(b) or the lessee is covered by paragraph (e), below) and is not limited to direct use leases. Direct use fees are due on the last day of the month following the month of production.
(e) If the lessee is a State, tribal, or local government covered by 43 CFR 3211.18(a)(3) and 30 CFR 206.366, check here: ☐. A lessee under this paragraph is not subject to paragraph (d), above. In lieu of royalties, the lessee under this paragraph must pay a nominal fee of
$ _____

Sec. 3. Bonds—A bond must be filed and maintained for lease operations as required by applicable regulations.

Sec. 4. Work requirements, rate of development, unitization, and drainage—Lessee must perform work requirements in accordance with applicable regulations (43 CFR 3207.11, 3207.12), and must prevent unnecessary damage to, loss of, or waste of leased resources. Lessor reserves the right to specify rates of development and production and to require lessee to commit to a communitization or unit agreement, within 30 days of notice, if in the public interest. Lessee must drill and produce wells necessary to protect leased lands from drainage or pay compensatory royalty for drainage in the amount determined by lessor. Lessor will exempt lessee from work requirements only where the lease overlies a mining claim that has an approved plan of operations and where BLM determines that the development of the geothermal resource on the lease would interfere with the mining operation (43 CFR 3207.13).

Sec. 5. Documents, evidence, and inspection—Lessee must file with the proper office of the lessor, not later than (30) days after the effective date thereof, any contract or evidence of other arrangement for the sale, use, or disposal of geothermal resources, byproducts produced, or for the sale of electricity generated using geothermal resources produced from the lease. At such times and in such form as lessor may prescribe, lessee must furnish detailed statements and all documents showing (a) amounts and quality of all geothermal resources produced and used (either for commercial production or generation of electricity, or in a direct use operation) or sold; (b) proceeds derived therefrom or from the sale of electricity generated using such resources; (c) amounts that are unavoidably lost or reinjected before use, used to generate plant parasitic electricity (as defined in 30 CFR 206.351) or electricity for lease operations, or otherwise used for lease operations related to the commercial production or generation of electricity; and (d) amounts and quality of all byproducts produced and proceeds derived from the sale or disposition thereof. Lessee may be required to provide plats and schematic diagrams showing development work and improvements, and reports with respect to parties in interest.
In a format and manner approved by lessor, lessee must: keep a daily drilling record, a log, and complete information on well surveys and tests; keep a record of subsurface investigations; and furnish copies to lessor when required.

Lessee must keep open at all reasonable times for inspection by any authorized officer of lessor, the leased premises and all wells, improvements, machinery, and fixtures thereon, and all books, accounts, maps, and records relative to operations, surveys, or investigations on or in the leased lands. Lessee must maintain copies of all contracts, sales agreements, accounting records, billing records, invoices, gross proceeds and payment data regarding the sale, disposition, or use of geothermal resources, byproducts produced, and the sale of electricity generated using resources produced from the lease, and all other information relevant to determining royalties or direct use fees. All such records must be maintained in lessee's accounting offices for future audit by lessor and produced upon request by lessor or lessor's authorized representative or agent. Lessee must maintain required records for 6 years after they are generated or, if an audit or investigation is underway, until released of the obligation to maintain such records by lessor.

Sec. 6. Conduct of operations—Lessee must conduct operations in a manner that minimizes adverse impacts to the land, air, and water, to cultural, biological, visual, and other resources, and to other land uses or users. Lessee must take reasonable measures deemed necessary by lessor to accomplish the intent of this section. To the extent consistent with leased rights granted, such measures may include, but are not limited to, modification to siting or design of facilities, timing of operations, and specification of interim and final reclamation measures. Lessor reserves the right to continue existing uses and to authorize future uses upon or in the leased lands, including the approval of easements or rights-of-way. Such uses will be conditioned so as to prevent unnecessary or unreasonable interference with rights of lessee. Prior to disturbing the surface of the leased lands, lessee must contact lessor to be apprised of procedures to be followed and modifications or reclamation measures that may be necessary. Areas to be disturbed may require inventories or special studies to determine the extent of impacts to other resources. Lessor may require lessee to complete minor inventories or short term special studies under guidelines provided by lessor. If, in the conduct of operations, threatened or endangered species, objects of historic or scientific interest, or substantial unanticipated environmental effects are observed, lessee must immediately contact lessor. Lessee must cease any operations that are likely to affect or take such species, or result in the modification, damage or destruction of such habitats or objects.

Sec. 7. Production of byproducts—If the production, use, or conversion of geothermal resources from these leased lands is susceptible of producing a valuable byproduct or byproducts, including commercially demineralized water for beneficial uses in accordance with applicable State water laws, lessor may require substantial beneficial production or use thereof by lessee.

Sec. 8. Damages to property—Lessee must pay lessor for damage to lessor's improvements, and must save and hold lessor harmless from all claims for damage or harm to persons or property as a result of lease operations.

Sec. 9. Protection of diverse interests and equal opportunity—Lessee must maintain a safe working environment in accordance with applicable regulations and standard industry practices, and take measures necessary to protect public health and safety. Lessor reserves the right to ensure that production is sold at reasonable prices and to prevent monopoly. Lessee must comply with Executive Order No. 11246 of September 24, 1965, as amended, and regulations and relevant orders of the Secretary of Labor issued pursuant thereto. Neither lessee nor lessee's subcontractor may maintain segregated facilities.

Sec. 10. Transfer of lease interests and relinquishment of lease—As required by regulations, lessee must file with lessor any assignment or other transfer of an interest in this lease. Subject to the requirements of 43 CFR subpart 3213, lessee may relinquish this lease or any legal subdivision by filing in the proper office a written relinquishment, which will be effective as of the date BLM receives it, subject to the continued obligation of the lessee and surety to be responsible for: paying all accrued rentals and royalties; plugging and abandoning all wells on the relinquished land; restoring and reclaiming the surface and other resources; and complying with 43 CFR 3200.4.

Sec. 11. Delivery of premises—At such time as all or portions of this lease are returned to lessor, lessee must place all wells in condition for suspension or abandonment, reclaim the land as specified by lessor, and within a reasonable period of time, remove equipment and improvements not deemed necessary by lessor for preservation of producible wells or continued protection of the environment.

Sec. 12. Proceedings in case of default—If lessee fails to comply with any provisions of this lease or other applicable requirements under 43 CFR 3200.4, and the noncompliance continues for 30 days after written notice thereof, this lease will be subject to termination in accordance with the Act and 43 CFR 3213. This provision will not be construed to prevent the exercise by lessor of any other legal and equitable remedy or action, including waiver of the default. Any such remedy, waiver, or action will not prevent later termination for the same default occurring at any other time. Whenever the lessee fails to comply in a timely manner with any of the provisions of the Act, this lease, the regulations, or other applicable requirements under 43 CFR 3200.4, and immediate action is required, the lessor may enter on the leased lands and take measures deemed necessary to correct the failure at the lessee's expense.

Sec. 13. Heirs and successors-in-interest—Each obligation of this lease will extend to and be binding upon, and every benefit hereof will inure to, the heirs, executors, administrators, successors, or assigns of the respective parties hereto.

(Continued on page 3)

N-61705

United States Department of the Interior

BUREAU OF LAND MANAGEMENT

Nevada State Office
P.O. Box 12000 (1340 Financial Blvd.)
Reno, Nevada 89520-0006
http://www.nv.blm.gov

TAKE PRIDE IN AMERICA

SEP 1 2 2007

In Reply Refer To:
N-43282X et al
3280/3282
3210/3220
NV923.d

CERTIFIED MAIL - RETURN RECEIPT REQUESTED
7005 2570 0001 8534 6261

DECISION

Caithness Dixie Valley, LLC 9590 Prototype Ct., Suite 200 Reno, NV 89521	:	Geothermal

Unit and Participating Area Boundaries Expanded
Leases Consolidated Segregated and Expired

The geothermal leases listed below have been partially committed to the following Unit Agreement (UA) and or Participating Area (PA):

Dixie Valley Unit Agreement and Participating Area, N-43282X, N-4328201
(Unit Name)

May 1, 2007 (Commitment Date)	Caithness Dixie Valley, LLC (Operator)

Departmental regulations 43 CFR 3210.10(1) provide for the segregation of leases committed in part to a unit agreement. Due to the unit expansion, the unitized lands are retained in the original lease; the non-unitized lands are segregated and assigned new serial numbers. The terms of leases included in the expansion of the UA are extended until such time as the subject unit terminates or if the lands are eliminated from the unit agreement (43 CFR 3208.10(4)). The anniversary date for all leases remains unchanged. Rental will be due on the next anniversary date of each lease located within the unit but outside of the PA. Leases or portions of leases within the PA will be subject to royalties. After expansion, lease N-17282 is totally within the Dixie Valley UA. The segregated leases expired on their own terms effective June 30, 2007. The descriptions of the base leases and the segregated leases are as follows:

N-17283A (unitized lands)
T. 24 N., R. 36 E., MDM, Nevada
sec. 22, all.

Containing 640.00 acres

N-84040 (nonunitized lands)
T. 24 N., R. 36 E., MDM, Nevada
sec. 20, E2;
sec. 21, all.
Containing 960.00 acres
Expired June 30, 2007

N-61705 (unitized lands)
T. 24 N., R. 36 E., MDM, Nevada
sec. 24, NW.

Containing 160.00 acres

N-8394 (unitized lands)
T. 24 N., R. 36 E., MDM, Nevada
sec. 01, SE.
Containing 160.00 acres

N-8489 (unitized lands)
T. 25 N., R. 37 E., MDM, Nevada
sec. 28, S2.

Containing 320.00 acres

N-84041 (nonunitized lands)
T. 24 N., R. 36 E., MDM, Nevada
sec. 24, S2;
T. 24 N., R. 37 E., MDM, Nevada
sec. 17, lots 1,2, 7-10, 15, 16;
sec. 19, lots 13-20.
Containing 645.94 acres
Expired June 30, 2007

N-84042 (nonunitized lands)
T. 24 N., R. 36 E., MDM, Nevada
sec. 01, lots 1-4, S2N2, SW.
Containing 479.20 acres
Expired June 30, 2007

N-84043(nonunitized lands)
T. 25 N., R. 37 E., MDM, Nevada
sec. 28, N2;
sec. 29, all.
Containing 960.00 acres
Expired June 30, 2007

Departmental regulations 43 CFR 3207.10(a) and 43 CFR 3208.10(4)(b) provides that the portion of leases included in the PA expansion are placed in additional term effective May 1, 2007, the effective date of the Dixie Valley PA expansion. Due to the PA expansion the portions of the leases that are now within the PA have been consolidated back into the original lease and are subject to royalties under 43 CFR 3211.16. The portions of the leases outside the PA expired on their own terms effective June 30, 2007. The descriptions of the lands consolidated back into the original leases are shown below in **bold**:

N-8317(participating area lands)
T. 24 N., R. 37 E., MDM, Nevada
sec. 04, lots 3,4, S2NW, SW;
sec. 04, lots 1,2, S2NE.
T. 25 N., R. 37 E., MDM, Nevada
sec. 33, N2, SE;
sec. 33, SW.
Containing 1120.80 acres

N-61704 (lands outside of participating area)
T. 24 N., R. 37 E., MDM, Nevada
sec. 04, SE;
sec. 09, all;
sec. 10, W2.

Containing 1120.00 acres
Expired June 30, 2007

N-12862 (participating area lands)
T. 24 N., R. 37 E., MDM, Nevada
sec. 05, lots 5-20;
sec. 06, lots 20-23;
sec. 06, lots 8-13, 18, 19.
T. 25 N., R. 37 E., MDM, Nevada
sec. 32, SE;
sec. 32, NE, SW.
Containing 1617.85 acres

N-61706 (lands outside of participating area)
T. 24 N., R. 37 E., MDM, Nevada
sec. 06, lots 14-17.
T. 25 N., R. 37 E., MDM, Nevada
sec. 32, NW.

Containing 317.55 acres
Expired June 30, 2007

N-12863 (participating area lands)
T. 24 N., R. 36 E., MDM, Nevada
sec. 12, NE, N2SE, SWSE
sec. 13, E2, SW;
T. 24 N., R. 37 E., MDM, Nevada
sec. 07, lots 5-15;
sec. 08, lots 1-16.
Containing 1856.17 acres

N-61707 (unitized lands)
T. 24 N., R. 36 E., MDM, Nevada
sec. 12, W2;
sec. 13, NW.

Containing 480.00 acres

The portion of the lands within lease N-61706 that are now outside the UA and PA expired on their own terms effective June 30, 2007. The lands within the PA that have been consolidated back into N-12862 are subject to royalties. Therefore the petition for reinstatement submitted July 16, 2007, for N-61706 is moot and cannot be considered.

We are evaluating the petition for reinstatement submitted July 16, 2007, for N-61707. This office will provide a separate decision addressing the petition for reinstatement for N-61707.

The Dixie Valley PA is comprised of 6278.84 acres, 5966.30 acres (95.02%) which are federal, 312.54 acres (4.98%) which are private.

If you have any questions please call Chris Pulliam at (775) 861-6506.

Elaine M. Lewis
for Atanda Clark
Chief, Branch of Minerals Adjudication

cc:
Nevada Division of Minerals
400 W. King St., Suite 106
Carson City, NV 89406

NV-920

Minerals Management Service

N-61705

United States Department of the Interior
BUREAU OF LAND MANAGEMENT
Nevada State Office
850 Harvard Way, P.O. Box 12000
Reno, Nevada 89520-0006

RECEIVED
JUN 10 1997

In Reply Refer To:
N-43282X
N-8317 et al
3210/3220
(NV-923.f)

Certified Mail
Return Receipt Requested

JUN 04 1997

June 4, 1997

DECISION

Oxbow Geothermal Corporation	:	Geothermal
5250 S. Virginia Street	:	Resources
Reno, NV 89502	:	Participating Area

Unit Agreement Contracted
Leases Segregated
Leases Extended

"When only part of the land subject to a lease included in a cooperative plan, a communitization agreement, a drilling agreement, or a unit plan is excluded from that plan or agreement because of the contraction of the area subject to that plan or agreement, the part of the lease which is excluded and the part which remains subject to the plan or agreement shall be segregated into separate leases." (*Reference 43 CFR 3203.1-5(b).*) The Dixie Valley Unit Agreement is hereby contracted to the boundaries of the Dixie Valley Participating Area effective July 1, 1997. The descriptions of the base and segregated leases are as follows:

N-8317 (participating area lands)

T. 24 N., R. 37 E., MDM, Nevada
sec. 04, lots 3,4, S½NW¼, SW¼.

T. 25 N., R. 37 E., MDM, Nevada
sec. 33, SW¼.

Containing: 480.28 acres

N-61704 (lands outside of participating area)

T. 24 N., R. 37 E., MDM, Nevada
sec. 04, lots 1,2, S½NE¼, SE¼;
sec. 09, all;
sec. 10, W½.

T. 25 N., R. 37 E., MDM, Nevada
sec. 33, N½, SW¼.

Containing: 1760.52 acres

N-12393 (participating area lands)

T. 24 N., R. 36 E., MDM, Nevada
sec. 24, NE¼;

T. 24 N., R. 37 E., MDM, Nevada
sec. 17, lots 3-6, 11-14;
sec. 18, lots 5-18;
sec. 19, lots 5-12.

Containing: 1371.47 acres

N-61705 (lands outside of participating area)

T. 24 N., R. 36 E., MDM, Nevada
sec. 24, W½, SE¼;

T. 24 N., R. 37 E., MDM, Nevada
sec. 17, lots 1,2,7-10,15,16;
sec. 19, lots 13-20.

Containing: 1125.94 acres

N-12862 (participating area lands)

T. 24 N., R. 37 E., MDM, Nevada
sec. 05, lots 5-20;
sec. 06, lots 20-23;

T. 25 N., R. 37 E., MDM, Nevada
sec. 32, SE¼.

Containing: 974.22 acres

N-61706 (lands outside of participating area)

T. 24 N., R. 37 E., MDM, Nevada
sec. 06, lots 8-19;

T. 25 N., R. 37 E., MDM, Nevada
sec. 32, N½ SW¼.

Containing: 961.18 acres

N-12863 (participating area lands)

T. 24 N., R. 36 E., MDM, Nevada
sec. 13, E½, SW¼;

T. 24 N., R. 37 E., MDM, Nevada
sec. 07, lots 5-15;
sec. 08, lots 1-16;

Containing: 1576.17 acres

N-61707 (lands outside of participating area)

T. 24 N., R. 36 E., MDM, Nevada
sec. 12, N½, N½S½, S½SW¼, SW¼ SE¼;
sec. 13, NW¼.

Containing: 760.00 acres

After contraction and segregation, leases N-8317, N-12393, N-12862 and N-12863 are totally within the Dixie Valley Unit Agreement/Participating Area. Leases N-8317 and N-12863 are held by actual production. Leases N-12393 and N-12862 are held by allocated production. Segregated leases N-61704 through N-61707, and the leases listed below, are now totally outside the Dixie Valley Unit Agreement/Participating Area and are no longer held by location in a producing unit:

		61704		
		61705		
N-8392	N-8491A	61706	N-12864	N-17284
N-8393	N-8498	61707	N-14971	N-17285
N-8394	N-9861		N-14972	N-17286
N-8395	N-10706		N-14974	N-60687
N-8489	N-11583		N-17283	
N-8491	N-12395		N-17283A	

As requested in your letter of April 17, 1997, the leases listed above, with the exception of lease N-60687, were specified as candidates for Steam Act Amendment extensions. In addition, the lands that are now contained in leases N-61704 through N-61707, were listed in that request.

The leases identified in the above paragraph are hereby given initial five-year Steam Act Amendment extensions *(reference 43 CFR 3208.1-4(c))*, effective July 1, 1997. Lease N-60687 is not extended as it is currently in its initial term, and therefore, does not qualify for a Steam Act extension.

The anniversary date for all leases remains unchanged. Rental will be due on the next anniversary of each lease. As the option selected in your April 17, 1997, letter, an additional payment of $3.00 per acre or fraction thereof in lieu of commercial quantities production will also be required on the anniversary date of each lease.

If you have any questions, please call Jack Lewis at (702) 785-6538.

Wayne M. Forman

acting Thomas V. Leshendok
Deputy State Director, Minerals Management

ORIGINAL PAPERS

BOOK 153 PAGE 568
800880

Record and Return to
TITLE RECORD DEPARTMENT
SUNOCO ENERGY DEVELOPMENT CO.
12700 Park Central - Suite 1500
Dallas, Texas

Form 3200-[illegible]
(May 1979)

UNITED STATES
DEPARTMENT OF THE INTERIOR
BUREAU OF LAND MANAGEMENT

Serial Number N-12393

USGS – KGRA Determination:

GEOTHERMAL RESOURCES LEASE

☐ Competitive ☒ Noncompetitive

In consideration of the terms and conditions contained herein, and the grant made hereby, this lease is entered into by the UNITED STATES OF AMERICA (hereinafter called the "Lessor"), acting through the Bureau of Land Management (hereinafter called the "Bureau") of the Department of the Interior (hereinafter called the "Department"), and

Sunoco Energy Development Company, 12700 Park Central Place, Suite 1500, Dallas, TX 75251 (hereinafter called the "Lessee").

This lease is made pursuant to the Geothermal Steam Act of 1970 (84 Stat. 1566; 30 U.S.C. 1001–1025) (hereinafter called "the Act") to be effective on June 1, 1976 (hereinafter called the "effective date"). It is subject to all the provisions of the Act and to all the terms, conditions, and requirements of (a) all regulations promulgated by the Secretary of the Interior (hereinafter called "the Secretary") in existence upon the effective date, specifically including, but not limited to, 43 CFR Parts 3000 and 3200 and 30 CFR Parts 270 and 271, (b) all geothermal resources operational orders (hereinafter called "GRO orders") issued pursuant thereto, all of which are incorporated herein and by reference made a part hereof, and (c) any regulations hereafter issued by the Secretary (except those inconsistent with any specific provisions of this lease other than regulations incorporated herein by reference) all of which shall be, upon their effective date, incorporated herein and, by reference, made a part hereof.

Sec. 1. GRANT – The Lessor hereby grants and leases to the Lessee the exclusive right and privilege to drill for, extract, produce, remove, utilize, sell, and dispose of geothermal steam and associated geothermal resources, (hereinafter called "geothermal resources"), in or under the following described lands situated within the County of Churchill, State of Nevada:

National Resource Lands	Acquired Lands
T. 24 N., R. 37 E., Mount Diablo Meridian sec. 17, All; sec. 18, Lots 2, 3, 4, E½, SE¼NW¼, E½SW¼; sec. 19, Lots 1, 2, 3, 4, E½W½, E½ (All). T. 24 N., R. 36 E., Mount Diablo Meridian sec. 24, All.	T. ; R. ; Meridian
Total Area 2455.33	Total Area

Containing 2455.33 acres (hereinafter called the "leased area" or "leased lands"), together with:

(a) The nonexclusive right to conduct within the leased area geological and geophysical exploration in accordance with applicable regulations; and

(b) The right to construct or erect and to use, operate, and maintain within the leased area, together with ingress and egress thereupon all wells, pumps, pipes, pipelines, buildings, plants, sumps, brine pits, reservoirs, tanks, waterworks, pumping stations, roads, electric power generating plants, transmission lines, industrial facilities, electric, telegraph or telephone lines, and such other works and structures and to use so much of the surface of the land as may be necessary or reasonably convenient for the production, utilization, and processing of geothermal resources or to the full enjoyment of the rights granted by this lease, subject to compliance with applicable laws and regulations; *Provided that*, although the use of the leased area for an electric power generating plant or transmission facilities or a commercial or industrial facility is authorized hereunder, the location of such facilities and the terms of occupancy therefor shall be under separate instruments issued under any applicable laws and regulations; and

(c) The nonexclusive right to drill potable water wells in accordance with state water laws within the leased area and to use the water produced therefrom for operations on the leased lands free of cost, provided that such drilling and development are conducted in accordance with procedures approved by the Supervisor of the Geological Survey (hereinafter called "Supervisor"); and

(d) The right to convert this lease to a mineral lease under the Mineral Leasing Act of February 25, 1920, as amended, and supplemented (30 U.S.C. 181–287) or under the Mineral Leasing Act for Acquired Lands (30 U.S.C. 351–359), whichever is appropriate, if the leasehold is primarily valuable for the production of one or more valuable by-products which are leasable under those statutes, and the lease is incapable of commercial production or utilization of geothermal steam: *Provided that*, an application is made therefor prior to the expiration of the lease extension by reason of by-product production as hereinafter provided, and subject to all the terms and conditions of said appropriate Acts. The Lessee is also granted the right to locate mineral deposits under the mining laws (30 U.S.C. 21–54), which would constitute by-products if commercial production or utilization of geothermal steam continued, but such a location to be valid must be completed within ninety (90) days after the termination of this lease. Any conversion of this lease to a mineral lease or a mining claim is contingent on the availability of such lands for this purpose at the time of the conversion. If the lands are withdrawn or acquired in aid of a function of any Federal Department or agency, the mineral lease or mining claim shall be subject to such additional terms and conditions as may be prescribed by such Department or agency for the purpose of making operations thereon consistent with the purposes for which these lands are administered; and

(e) The right, without the payment of royalties hereunder, to reinject into the leased lands geothermal resources and condensates to the extent that such resources and condensates are not utilized, but their reinjection is necessary for operations under this lease in the recovering or processing of geothermal resources. If the Lessee, pursuant to any approved plan, disposes of the unusable brine and produced waste products into underlying formations, he may do so without the payment of royalties.

Sec. 2. TERM

(a) This lease shall be for a primary term of ten (10) years from the effective date and so long thereafter as geothermal steam is produced or utilized in commercial quantities but shall in no event continue for more than forty (40) years after the end of the primary term. However, if at the end of that forty-year period geothermal steam is being produced or utilized in commercial quantities, and the leased lands are not needed for other purposes, the Lessee shall have a preferential right to a renewal of this lease for a second forty-year term in accordance with such terms and conditions as the Lessor deems appropriate.

(b) If actual drilling operations are commenced on the leased lands or under an approved plan or agreement on behalf of the leased lands prior to the end of the primary term, and are being diligently prosecuted at the end of the primary term, this lease shall be extended for five (5) years and so long thereafter, but not more than thirty-five (35) years, as geothermal steam is produced or utilized in commercial quantities. If at the end of such extended term geothermal steam is being produced or utilized in commercial quantities, the Lessee shall have a preferential right to a renewal for a second term as in (a) above.

(c). If the Lessor determines at any time after the primary term that this lease is incapable of commercial production and utilization of geothermal steam, but one or more valuable by-products are or can be produced in commercial quantities, this lease shall be extended for so long as such by-products are produced in commercial quantities but not for more than five (5) years from the date of such determination.

Sec. 3. RENTALS AND ROYALTIES

(a) *Annual Rental* – For each lease year prior to the commencement of production of geothermal resources in commercial quantities on the leased lands, the Lessee shall pay the Lessor on or before the anniversary date of the lease a rental of $ 1.00 for each acre or fraction thereof.

(b) *Escalating Rental* – Beginning with the sixth lease year and for each year thereafter until the lease year beginning on or after the commencement of production of geothermal resources in commercial quantities, the Lessee shall pay on or before the anniversary date of the lease an escalated rental in an amount per acre or fraction thereof equal to the rental per acre for the preceding year and an additional sum of one (1) dollar per acre or fraction thereof. If the lease is extended beyond ten (10) years for reasons other than the commencement of production of geothermal resources in commercial quantities, the rental for the eleventh year and for each lease year thereafter until the lease year beginning on or after the commencement of such production will be the amount of rental for the tenth lease year. If any expenditures are made in any lease year for diligent exploration on the leased lands in excess of the minimum required expenditures for that year, the excess may be credited against any rentals in excess of $ 1.00 per acre or fraction thereof due the Lessor for that or any future year.

(c) *Royalty* – On or before the last day of the calendar month after the month of commencement of production in commercial quantities of geothermal resources and thereafter on a monthly basis, the Lessee shall pay to the Lessor:

(1) A royalty of 10 percent on the amount or value of steam, or any other form of heat or other associated energy produced, processed, removed, sold, or utilized from this lease or reasonably susceptible to sale or utilization by the Lessee.

(2) A royalty of 5 percent of the value of any by-product derived from production under this lease, produced, processed, removed, sold, or utilized from this lease or reasonably susceptible of sale or utilization by the Lessee, except that as to any by-product which is a mineral named in Sec. 1 of the Mineral Leasing Act of February 25, 1920, as amended, (30 U.S.C. 181), the rate of royalty for such mineral shall be the same as that provided in that statute and the maximum rate of royalty for such mineral shall not exceed the maximum royalty applicable under that statute.

(3) A royalty of 5 percent of the value of commercially demineralized water which has been produced from the leased lands, and has been sold or utilized by the Lessee or is reasonably susceptible of sale or utilization by the Lessee. In no event shall the Lessee pay to the Lessor, for the lease year beginning on or after the commencement of production in commercial quantities on the leased lands or any subsequent lease year, a royalty of less than two (2) dollars per acre or fraction thereof. If royalty paid on production during the lease year has not satisfied this requirement, the Lessee shall pay the difference on or before the expiration date of the lease year for which it is paid.

(d) *Waiver and Suspension of Rental and Royalties* – Rentals or royalties may be waived, suspended, or reduced pursuant to the applicable regulations on the entire leasehold or any portion thereof in the interest of conservation or for the purpose of encouraging the greatest ultimate recovery of geothermal resources if the Lessor determines that it is necessary to do so to promote such development, or because the lease cannot be successfully operated under the terms fixed herein.

(e) *Undivided Fractional Interests* – Where the interest of the Lessor in the geothermal resources underlying any tract or tracts described in Sec. 1 is an undivided fractional interest, the rentals and royalties payable on account of each such tract shall be in the same proportion to the rentals and royalties provided in this lease as the individual fractional interest of the Lessor in the geothermal resources underlying such tract is to the full fee interest.

(f) *Readjustments* – Rentals and royalties hereunder may be readjusted in accordance with the Act and regulations to rates not in excess of the rates provided therein, and at not less than twenty (20) year intervals beginning thirty-five (35) years after the date geothermal steam is produced from the lease as determined by the Supervisor.

Sec. 4. PAYMENTS – It is expressly understood that the Secretary may establish the values and minimum values of geothermal resources to compute royalties in accordance with the applicable regulations. Unless otherwise directed by the Secretary, all payments to the Lessor will be made as required by the regulations. If there is no well on the leased lands capable of producing geothermal resources in commercial quantities, the failure to pay rental on or before the anniversary date shall cause the lease to terminate by operation of law except as provided by Sec. 3244.2 of the regulations. If the time for payment falls on a day on which the proper office to receive payment is closed, payment shall be deemed to be made on time if made on the next official working day.

Sec. 5. BONDS – The Lessee shall file with the Authorized Officer of the Bureau (hereinafter called the "Authorized Officer") shall maintain at all times the bonds required under the regulations to be furnished as a condition to the issuance of this lease or prior to entry on the leased lands in the amounts established by the Lessor and to furnish such additional bonds or security as may be required by the Lessor upon entry on the lands or after operations or production have begun.

Sec. 6. WELLS

(a) The Lessee shall drill and produce all wells necessary to protect the leased land from drainage by operations on lands not the property of the Lessor, or other lands of the Lessor leased at a lower royalty rate, or on lands as to which royalties and rentals are paid into different funds from those into which royalties under this lease are paid. However, in lieu of any part of such drilling and production, with the consent of the Supervisor, the Lessee may compensate the Lessor in full each month for the estimated loss of royalty through drainage in the amount determined by said Supervisor.

(b) At the Lessee's election, and with the approval of the Supervisor, the Lessee shall drill and produce other wells in conformity with any system of well spacing or production allotments affecting the field or area in which the leased lands are situated, which is authorized by applicable law.

(c) After due notice in writing, the Lessee shall diligently drill and produce such wells as the Supervisor shall require so that the leased lands may be properly and timely developed and for the production of geothermal steam and its by-products, including commercially demineralized water for beneficial uses in accordance with applicable state laws. However, the Supervisor may waive or modify the requirements of this subparagraph (c) in the interest of conservation of natural resources or for economic feasibility or other reasons satisfactory to him. If the products or by-products of geothermal production from wells drilled on this lease are susceptible of producing commercially demineralized water for beneficial uses, and a program therefor is not initiated with due diligence, the Lessor may at its option elect to take such products or by-products and the Lessee shall deliver all or any portion thereof to the Lessor at any point in the Lessee's geothermal gathering or disposal system without cost to the Lessee, if the Lessee's activities, under the lease, would not be impaired and such delivery would otherwise be consistent with field and operational requirements. The retention of this option by the Lessor shall in no way relieve the Lessee from the duty of producing commercially demineralized water where required to do so by the Lessor, except when the option is being exercised and then only with respect to wells where it is being exercised, or limit the Lessor's right to take any action under Sec. 25 to enforce that requirement.

Sec. 7. INSPECTION – The Lessee shall keep open at all reasonable times for the inspection of any duly authorized representative of the Lessor the leased lands and all wells, improvements, machinery, and fixtures thereon and all production reports, maps, records, books, and accounts relative to operations under the lease, and well logs, surveys, or investigations of the leased lands.

Sec. 8. CONDUCT OF OPERATIONS – The Lessee shall conduct all operations under this lease in a workmanlike manner and in accordance with all applicable statutes, regulations, and GRO orders, and all other appropriate directives of the Lessor to prevent bodily injury, danger to life or health, or property damage, and to avoid the waste of resources, and shall comply with all requirements which are set forth in 43 CFR Group 3200, including, but not limited to, Subpart 3204, or which may be prescribed by the Lessor pursuant to the regulations, and with the special stipulations which are attached to the lease, all of which are specifically incorporated into this lease. A breach of any term of this lease, including the stipulations attached hereto, will be subject to all the provisions of this lease with respect to remedies in case of default. Where any stipulation is inconsistent with a regular provision of this lease, the stipulation shall govern.

Sec. 9. INDEMNIFICATION

(a) The Lessee shall be liable to the Lessor for any damage suffered by the Lessor in any way arising from or connected with the Lessee's activities and operations conducted pursuant to this lease, except where damage is caused by employees of the Lessor acting within the scope of their authority.

(b) The Lessee shall indemnify and hold harmless the Lessor from all claims arising from or connected with the Lessee's activities and operations under this lease.

(c) In any case where liability without fault is imposed on the Lessee pursuant to this section, and the damages involved were caused by the action of a third party, the rules of subrogation shall apply in accordance with the law of the jurisdiction where the damage occurred.

Sec. 10. CONTRACTS FOR SALE OR DISPOSAL OF PRODUCTS – The Lessee shall file with the Supervisor not later than thirty (30) days after the effective date thereof any contract, or evidence of other arrangement for the sale or disposal of geothermal resources.

Sec. 11. ASSIGNMENT OF LEASE OR INTEREST THEREIN – Within ninety (90) days from the date of execution thereof, the Lessee shall file for approval by the Authorized Officer any instruments of transfer made of this lease or of any interest therein, including assignments of record title and working or other interests.

Sec. 12. REPORTS AND OTHER INFORMATION – At such times and in such form as the Lessor may prescribe, the Lessee shall comply with all reporting requirements of the geothermal resources leasing, operating, and unit regulations and shall submit quarterly reports containing the data which it has collected through the monitoring of air, land, and water quality and all other data pertaining to the effect on the environment by operations under the lease. The Lessee shall also comply with such other reporting requirements as may be imposed by the Authorized Officer or the Supervisor. The Lessor may release to the general public any reports, maps, or other information submitted by the Lessee except geologic and geophysical interpretations, maps, or data subject to 30 CFR 270.79 or unless the Lessee shall designate that information as proprietary and the Supervisor or the Authorized Officer shall approve that designation.

Sec. 13. DILIGENT EXPLORATION – In the manner required by the regulations, the Lessee shall diligently explore the leased lands for geothermal resources until there is production in commercial quantities applicable to this lease. After the fifth year of the primary term the Lessee shall make at least

the minimum expenditures required to qualify the operations on the leased lands as diligent exploration under the regulations.

Sec. 14. PROTECTION OF THE ENVIRONMENT (LAND, AIR AND WATER) AND IMPROVEMENTS – The Lessee shall take all mitigating actions required by the Lessor to prevent: (a) soil erosion or damage to crops or other vegetative cover on Federal or non-Federal lands in the vicinity; (b) the pollution of land, air, or water; (c) land subsidence, seismic activity, or noise emissions; (d) damage to aesthetic and recreational values; (e) damage to fish or wildlife or their habitats; (f) damage to or removal of improvements owned by the United States or other parties; or (g) damage to or destruction or loss of fossils, historic or prehistoric ruins, or artifacts. Prior to the termination of bond liability or at any other time when required and to the extent deemed necessary by the Lessor, the Lessee shall reclaim all surface disturbances as required, remove or cover all debris or solid waste, and, so far as possible, repair the offsite and onsite damage caused by his activity or activities incidental thereto, and return access roads or trails and the leased lands to an acceptable condition including the removal of structures, if required. The Supervisor or the Authorized Officer shall prescribe the steps to be taken by Lessee to protect the surface and the environment and for the restoration of the leased lands and other lands affected by operations on the leased lands and improvements thereon, whether or not the improvements are owned by the United States. Timber or mineral materials may be obtained only on terms and conditions imposed by the Authorized Officer.

Sec. 15. WASTE – The Lessee shall use all reasonable precautions to prevent waste of natural resources and energy, including geothermal resources, or of any minerals, and to prevent the communication of water or brine zones with any oil, gas, fresh water, or other gas or water bearing formations or zones which would threaten destruction or damage to such deposits. The Lessee shall monitor noise, air, and water quality conditions in accordance with any orders of the Supervisor.

Sec. 16. MEASUREMENTS – The Lessee shall gauge or otherwise measure all production, sales, or utilization of geothermal resources and shall record the same accurately in records as required by the Supervisor. Reports on production, sales, or utilization of geothermal resources shall be submitted in accordance with the terms of this lease and the regulations.

Sec. 17. RESERVATIONS TO LESSOR – All rights in the leased area not granted to the Lessee by this lease are hereby reserved to the Lessor. Without limiting the generality of the foregoing such reserved rights include:

(a) *Disposal* – The right to sell or otherwise dispose of the surface of the leased lands or any resource in the leased lands under existing laws, or laws hereafter enacted, subject to the rights of the Lessee under this lease;

(b) *Rights-of-way* – The right to authorize geological and geophysical explorations on the leased lands which do not interfere with or endanger actual operations under this lease, and the right to grant such easements or rights-of-way for joint or several use upon, through or in the leased area for steam lines and other public or private purposes which do not interfere with or endanger actual operations or facilities constructed under this lease;

(c) *Mineral Rights* – The ownership of and the right to extract oil, hydrocarbon gas, and helium from all geothermal steam and associated geothermal resources produced from the leased lands;

(d) *Casing* – The right to acquire the well and casing at the fair market value of the casing where the Lessee finds only potable water, and such water is not required in lease operations; and

(e) *Measurements* – The right to measure geothermal resources and to sample any production thereof.

Sec. 18. ANTIQUITIES AND OBJECTS OF HISTORIC VALUE – The Lessee shall immediately bring to the attention of the Authorized Officer any antiquities or other objects of historic or scientific interest, including but not limited to historic or prehistoric ruins, fossils, or artifacts discovered as a result of operations under this lease, and shall leave such discoveries intact. Failure to comply with any of the terms and conditions imposed by the Authorized Officer with regard to the preservation of antiquities may constitute a violation of the Antiquities Act (16 U.S.C. 431-433). Prior to operations, the Lessee shall furnish to the Authorized Officer a certified statement that either no archaeological values exist or that they may exist on the leased lands to the best of the of the Lessee's knowledge and belief and that they might be impaired by geothermal operations. If the Lessee furnishes a statement that archaeological values may exist where the land is to be disturbed or occupied, the Lessee will engage a qualified archaeologist, acceptable to the Authorized Officer, to survey and salvage, in advance of any operations, such archaeological values on the lands involved. The responsibility for the cost for the certificate, survey, and salvage will be borne by the Lessee, and such salvaged property shall remain the property of the Lessor or the surface owner.

Sec. 19. DIRECTIONAL DRILLING – A directional well drilled under the leased area from a surface location on nearby land not covered by the lease shall be deemed to have the same effect for all purposes of this lease as a well drilled from a surface location on the leased area. In such circumstances, drilling shall be considered to have been commenced on the nearby land for the purposes of this lease, and production of geothermal resources from the leased area through any directional well located on nearby land, or drilling or reworking of any such directional well shall be considered production or drilling or reworking operations (as the case may be) on the leased area for all purposes of this lease. Nothing contained in this section shall be construed as granting to the Lessee any right in any land outside the leased area.

Sec. 20. OVERRIDING ROYALTIES – The Lessee shall not create overriding royalties of less than one-quarter (1/4) of one percent of the value of output nor in excess of 50 percent of the rate of royalty due to the Lessor specified in Sec. 3 of this lease except as otherwise authorized by the regulations. The Lessee expressly agrees that the creation of any overriding royalty which does not provide for a prorated reduction of all overriding royalties so that the aggregate rate of royalties does not exceed the maximum rate permissible under this section, or the failure to suspend an overriding royalty during any period when the royalties due to the Lessor have been suspended pursuant to the terms of this lease, shall constitute a violation of the lease terms.

Sec. 21. READJUSTMENT OF TERMS AND CONDITIONS – The terms and conditions of this lease other than those related to rentals and royalties may be readjusted in accordance with the Act at not less than ten-year intervals beginning ten (10) years after the date geothermal steam is produced from the leased premises as determined by the Supervisor.

Sec. 22. COOPERATIVE OR UNIT PLAN – The Lessee agrees that it will on its own, or at the request of the Lessor where it is determined to be necessary for the conservation of the resource or to prevent the waste of the resource, subscribe to and operate under any reasonable cooperative or unit plan for the development and operation of the area, field, or pool, or part thereof embracing the lands subject to this lease as the Secretary may determine to be practicable and necessary or advisable in the interest of conservation. In the event the leased lands are included within a unit, the terms of this lease shall be deemed to be modified to conform to such unit agreement. Where any provision of a cooperative or unit plan of development which has been approved by the Secretary, and which by its terms affects the leased area or any part thereof, is inconsistent with a provision of this lease, the provisions of such cooperative or unit plan shall govern.

Sec. 23. RELINQUISHMENT OF LEASE – The Lessee may relinquish this entire lease or any officially designated subdivision of the leased area in accordance with the regulations by filing in the proper BLM office a written relinquishment, in triplicate, which shall be effective as of the date of filing. No relinquishment of this lease or any portion of the leased area shall relieve the Lessee or its surety from any liability for breach of any obligation of this lease, including the obligation to make payment of all accrued rentals and royalties and to place all wells in the leased lands to be relinquished in condition for suspension or abandonment, and to protect or restore substantially the surface or subsurface resources in a manner satisfactory to the Lessor.

Sec. 24. REMOVAL OF PROPERTY ON TERMINATION OR EXPIRATION OF LEASE

(a) Upon the termination or expiration of this lease in whole or in part, or the relinquishment of the lease in whole or in part, as herein provided, the Lessee shall within a period of ninety (90) days (or such longer period as the Supervisor may authorize because of adverse climatic conditions) thereafter remove from the leased lands, no longer subject to the lease all structures, machinery, equipment, tools, and materials in accordance with applicable regulations and orders of the Supervisor. However, the Lessee shall, for a period of not more than six (6) months, continue to maintain any such property needed in the relinquished area, as determined by the Supervisor, for producing wells or for drilling or producing geothermal resources on other leases.

(b) Any structures, machinery, equipment, tools, appliances, and materials, subject to removal by the Lessee, as provided above, which are allowed to remain on the leased lands shall become the property of the Lessor on expiration of the 90-day period or any extension of that period which may be granted by the Supervisor. If the Supervisor directs the Lessee to remove such property, the Lessee shall do so at its own expense, or if it fails to do so within a reasonable period, the Lessor may do so at the Lessee's expense.

Sec. 25. REMEDIES IN CASE OF DEFAULT

(a) Whenever the Lessee fails to comply with any of the provisions of the Act, or the terms and stipulations of this lease, or of the regulations issued under the Act, or of any order issued pursuant to those regulations, and that default shall continue for a period of thirty (30) days after service of notice by the Lessor, the Lessor may (1) suspend operations until the requested action is taken to correct the noncompliance, or (2) cancel the lease in accordance with Sec. 12 of the Act (30 U.S.C. 1011). However, the 30-day notice provision applicable to this lease under Sec. 12 of the Act shall also apply as a prerequisite to the institution of any legal proceedings by the Lessor to cancel this lease while it is in a producing status. Nothing in this subsection shall be construed to apply to, or require any notice with respect to any legal action instituted by the Lessor other than an action to cancel the lease pursuant to Sec. 12 of the Act.

(b) Whenever the Lessee fails to comply with any of the provisions of the Act, or of this lease, or the regulations, or of any GRO Orders, or other orders, and immediate action is required, the Lessor without waiting for action by the Lessee may enter on the leased lands and take such measures as it may deem necessary to correct the failure, including a suspension of operations or production, all at the expense of the Lessee.

(c) A waiver of any particular violation of the provisions of the Act, or of this lease, or of any regulations promulgated by the Secretary under the Act, shall not prevent the cancellation of this lease or the exercise of any other remedy or remedies under paragraphs (a) and (b) of this section by reason of any other such violation, or for the same violation occuring at any other time.

(d) Nothing herein shall limit or affect the Lessee's right to a hearing and appeal as provided in Sec. 12 of the

Act and in the regulations promulgated thereunder.

(e) Upon cancellation, the Lessee shall remove all property in accordance with Sec. 24 hereof, and shall restore the leased lands in a manner acceptable to the Lessor or as may be otherwise required by the Lessor.

Sec. 26. HEIRS AND SUCCESSORS IN INTEREST – Each obligation hereunder shall extend to and be binding upon, and every benefit hereof shall inure to, the heirs, executors, administrators, successors, or assigns, of the respective parties hereto.

Sec. 27. UNLAWFUL INTEREST – No Member of, or Delegate to Congress, or Resident Commissioner, after his election or appointment, either before or after he has qualified, and during his continuance in office, and no officer, agent, or employee of the Department shall be admitted to any share or part in this lease or derive any benefit that may arise therefrom; and the provisions of Sec. 3741 of the Revised Statutes (41 U.S.C. Sec. 22), as amended, and Sections 431, 432, and 433 of Title 18 of the United States Code, relating to contracts made or entered into, or accepted by or on behalf of the United States, form a part of this lease so far as the same may be applicable.

Sec. 28. MONOPOLY AND FAIR PRICES – The Lessor reserves full power and authority to protect the public interest by promulgating and enforcing all orders necessary to insure the sale of the production from the leased lands at reasonable prices, to prevent monopoly, and to safeguard the public interest.

Sec. 29. EQUAL OPPORTUNITY CLAUSE – The Lessee agrees that, during the performance of this contract:

(1) The Lessee will not discriminate against any employee or applicant for employment because of race, color, religion, sex, or national origin. The Lessee will take affirmative action to ensure that applicants are employed, and that employees are treated during employment, without regard to their race, color, religion, sex, or national origin. Such action shall include, but not be limited to the following: employment, upgrading, demotion, or transfer; recruitment or recruitment advertising, layoff or termination; rates of pay or other forms of compensation; and selection for training, including apprenticeship. The Lessee agrees to post in conspicuous places, available to employees and applicants for employment, notices to be provided by the Lessor setting forth the provisions of this Equal Opportunity clause.

(2) The Lessee will, in all solicitations or advertisements for employees placed by or on behalf of the Lessee, state that all qualified applicants will receive consideration for employment without regard to race, color, religion, sex, or national origin.

(3) The Lessee will send to each labor union or representative of workers with which Lessee has a collective bargaining agreement or other contract or understanding, a notice, to be provided by the Lessor, advising the labor union or workers' representative of the Lessee's commitments under this Equal Opportunity clause, and shall post copies of the notice in conspicuous places available to employees and applicants for employment.

(4) The Lessee will comply with all provisions of Executive Order No. 11246 of September 24, 1965, as amended, and of the rules, regulations, and relevant orders of the Secretary of Labor.

(5) The Lessee will furnish all information and reports required by Executive Order No. 11246 of September 24, 1965, as amended, and by the rules, regulations, and orders of the Secretary of Labor, or pursuant thereto, and will permit access to its books, records, and accounts by the Secretary of the Interior and the Secretary of Labor for purposes of investigation to ascertain compliance with such rules, regulations, and orders.

(6) In the event of the Lessee's noncompliance with the Equal Opportunity clause of this lease or with any of said rules, regulations, or orders, this lease may be canceled, terminated or suspended in whole or in part and the Lessee may be declared ineligible for further Federal Government contracts or leases in accordance with procedures authorized in Executive Order No. 11246 of September 24, 1965, as amended, and such other sanctions as may be imposed and remedies invoked as provided in Executive Order No. 11246 of September 24, 1965, as amended, or by rule, regulation, or order of the Secretary of Labor, or as otherwise provided by law.

(7) The Lessee will include the provisions of Paragraphs (1) through (7) of this Section (29) in every contract, subcontract or purchase order unless exempted by rules, regulations, or orders of the Secretary of Labor issued pursuant to Section 204 of Executive Order No. 11246 of September 24, 1965, as amended, so that such provisions will be binding upon each contractor, subcontractor, or subcontract, or purchase order as the Secretary may direct as a means of enforcing such provisions including sanctions for noncompliance; *provided, however,* that in the event the Lessee becomes involved in, or is threatened with, litigation with a contractor, subcontractor, or vendor as a result of such direction by the Secretary, the Lessee may request the Lessor to enter into such litigation to protect the interests of the Lessor.

Sec. 30. CERTIFICATION OF NONSEGREGATED FACILITIES – By entering into this lease, the Lessee certifies that it does not and will not maintain or provide for its employees any segregated facilities at any of its establishments, and that it does not and will not permit its employees to perform their services at any location, under its control, where segregated facilities are maintained. The Lessee agrees that a breach of this certification is a violation of the Equal Opportunity clause of this lease. As used in this certification, the term "segregated facilities" means, but is not limited to, any waiting rooms, work areas, rest rooms and wash rooms, or restaurants or other eating areas, time clocks, or locker rooms, and other storage or dressing rooms, parking lots, drinking fountains, recreation or entertainment areas, transportation, and housing facilities provided for employees which are segregated by explicit directive, or are in fact segregated on the basis of race, color, religion, or national origin because of habit, local custom, or otherwise. Lessee further agrees that (except where it has obtained identical certifications from proposed contractors and subcontractors for specific time periods) it will obtain identical certifications from proposed contractors and subcontractors prior to the award of contracts or subcontracts exceeding $10,000 which are not exempt from the provisions of the Equal Opportunity clause; that it will retain such certifications in its files; and that it will forward the following certification to such proposed contractors and subcontractors (except where the proposed contractor or subcontractor has submitted identical certifications for specific time periods); it will notify prospective contractors and subcontractors of requirement for certification of nonsegregated facilities. A Certification of Nonsegregated Facilities, as required by the May 9, 1967 Order (32 F.R. 7439, May 19, 1967) on Elimination of Segregated Facilities, by the Secretary of Labor, must be submitted prior to the award of a contract or subcontract exceeding $10,000 which is not exempt from the provisions of the Equal Opportunity clause. The certification may be submitted either for each contract and subcontract or for all contracts and subcontracts during a period (i.e., quarterly, semiannually, or annually).

Sec. 31. SPECIAL STIPULATIONS – *(stipulations, if any, are attached hereto and made a part hereof)*

165219

OFFICIAL RECORDS
CHURCHILL COUNTY, NEVADA
RECORDED BY
SUNOCO ENERGY DEVELOPMENT CO.

INDEXED

'79 JUN 6 AM 9:43

STEVE E. [illegible]
COUNTY RECORDER

VERIFIED

FEE 6.00 DEP

The certified statement required by Section 18 of the lease form must be completed by a qualified archaeologist, acceptable to the Authorized Officer.

In witness whereof the parties have executed this lease.

Lessee:

SUNOCO ENERGY DEVELOPMENT CO.

W. L. Parchman, Jr.
(Signature of Lessee)

W. L. Parchman, Jr.
Agent and Attorney-in-Fact
(Signature of Lessee)

February 18, 1976
(Date)

SEAL

THE UNITED STATES OF AMERICA, Lessor:

By A. John Hillsamer
(Authorized Officer)

(Title)

A. John Hillsamer, Chief
Lands & Minerals Operations 5/14/76
(Date)

Record and Return to
TITLE RECORD DEPARTMENT
SUNOCO ENERGY DEVELOPMENT CO.
12700 Park Central Place - Suite 1500

GPO 853-471

END OF DOCUMENT

EXHIBIT 5

Affidavit of Publication

LVN
Lahontan Valley News
& Fallon Eagle Standard

Proof and Statement of Publication

P.O. Box 1888 Carson City, NV 89702
(775) 881-1201 FAX: (775) 887-2408

Customer Number: # 1066068

Legal Account
Allison, MacKenzie, Pavlakis, Wright & Fagan
402 North Division Street
Carson City, NV 89703
Attn: Loretta Evenson

Melissa Saavedra says:
That (s)he is a legal newspaper published Wednesday, Friday, Sunday at Fallon, in the State of Nevada.

TGP Dixie Development CO

Ad #6626478

of which a copy is hereto attached, was published in said newspaper for the full required period of **1 times** commencing on **June 10, 2011,** and ending on **June 10, 2011,** all days inclusive.

Signed: _____

Subscribed and sworn to before me this 14 day of **June, 2011**

_____
Notary Public

STATEMENT:

AMBER CLAVELLE
NOTARY PUBLIC
STATE OF NEVADA
Date Appointment Exp: 06-19-11
Certificate No: 01-69154-1

Date	Amount	Credit	Balance
6/10/11	$ 172.49	$ 0.00	$172.49

BEFORE THE PUBLIC UTILITIES COMMISSION OF NEVADA
NOTICE OF APPLICATION FOR A PERMIT TO CONSTRUCT UTILITY FACILITY UNDER THE UTILITY ENVIRONMENTAL PROTECTION ACT

TGP DIXIE DEVELOPMENT COMPANY, LLC ("TGP") is submitting, pursuant to the Nevada Utility Environmental Protection Act ("UEPA"), its application to the Public Utilities Commission of Nevada ("PUCN") for a permit to construct proposed utility facilities consisting of, among other facilities, a nominal 70 megawatt ("MW"), utility grade geothermal power plant and associated facilities in Dixie Valley, Churchill County, Nevada. The power plant will generate electricity utilizing geothermal resources located on federal lands in what is known as the Coyote Canyon Lease Area. The TGP Coyote Canyon Project will consist of the following: a nominal 70 MW geothermal power plant; geothermal production and injection wells, pipelines, and support facilities; a 230 kV transmission line (gen-tie) approximately one-half mile in length which will connect to an existing 211 mile 230 kV transmission line which extends from Terra-Gen Power, LLC's existing Dixie Valley geothermal power plant to the Control Substation located near Bishop, California; and a non potable water well. The UEPA application to construct these facilities is made pursuant to the Nevada Revised Statutes, Chapter 704, and the Nevada Administrative Code, Chapter 703.

The facilities to be built will be located on public lands managed by the Bureau of Land Management ("BLM"). A description of the location of the proposed utility facilities, all located within Churchill County, Nevada, is as follows:

Site 1: A parcel approximately 40 acres in size located within the Northwest Quarter of Section 13, Township 24 North, Range 36 East, M.D.B.&M. on Federal Geothermal Resources Lease N-61707.
Site 2: A parcel approximately 40 acres in size located within the Southwest Quarter of Section 14 and the Southeast Quarter of Section 15, Township 24 North, Range 36 East, M.D.B.&M. on Federal Geothermal Resources Lease N-17282.
Site 3: A parcel approximately 40 acres in size located within the East Half of the Northwest Quarter and the West Half of the Northeast Quarter of Section 22, Township 24 North, Range 36 East, M.D.B.&M. on Federal Geothermal Resources Lease N-17283A.
Site 4: A parcel approximately 40 acres in size located within the South Half of the Northeast Quarter and the North Half of the Southeast Quarter of Section 21, Township 24 North, Range 36 East, M.D.B.&M. on Federal Geothermal Resources Lease N-86892.

The contents of the application to be submitted to the PUCN for the facilities described include:

1. A description of the location of the proposed utility facilities requiring a permit to construct from the PUCN;
2. A general description of the generating facility, gen-tie, and related facilities and the natural resources that will be used during construction and operation of the facility;
3. A summary of any studies which TGP anticipates will be made, or have been made, of the environmental impact of the proposed utility facilities; and
4. A list of permits required by federal, state, regional and local governmental entities whose approval may be required for the proposed utility facilities.

A copy of the application will be available on the PUCN's website following TGP's filing of the application. Additional information regarding the UEPA process and a person's right to participate in the process can be found at the Nevada Revised Statutes and the Nevada Administrative Code, Chapter 704 and 703, respectively. Protests and written comments regarding the granting of the UEPA application must be filed with the PUCN as provided by law.
Dated this 8th day of June, 2011.
TGP Dixie Development Company, LLC

Pub: June 10, 2011 **Ad#6626478**

EXHIBIT 6

Proof of Service - State Clearinghouse

PROOF OF SERVICE

I hereby certify that I am an employee of ALLISON, MacKENZIE, PAVLAKIS, WRIGHT & FAGAN, LTD., and that on this date I mailed a copy of the foregoing document entitled "Application of TGP Dixie Development Company, LLC for a Permit to Construct the Coyote Canyon Geothermal Electric Generation Project" pursuant to the Nevada Utility Environmental Protection Act, to the Nevada State Clearinghouse, addressed as follows:

Nevada State Clearing House
Department of Administration
Budget and Planning Division
209 E. Musser St., Room 200
Carson City, NV 89701

DATED this 15th day of June, 2011.

EXHIBIT 7

EA Exploration - April/2010

BLM

ENVIRONMENTAL ASSESSMENT

TGP Dixie Development Company, LLC

Coyote Canyon and Dixie Meadows Geothermal Exploration

DOI-BLM-NV-C010-2010-0010-EA

U.S. Department of the Interior
Bureau of Land Management
Carson City District
Stillwater Field Office
5665 Morgan Mill Road
Carson City, NV 89701
775-885-6000

April 2010

United States Department of the Interior

BUREAU OF LAND MANAGEMENT
Carson City District Stillwater Field Office
5665 Morgan Mill Road
Carson City, Nevada 89701-1448
http://www.blm.gov/nv/st/en/fo/carson_city_field.html

TAKE PRIDE IN AMERICA

APR 8 2010

In Reply Refer To:
N-17282, 61705, 61707, 17283A,
N-86892, 60685, 60686
3200/1792

Dear Reader:
The Bureau of Land Management (BLM), Carson City District, Stillwater Field Office, has completed an environmental assessment (EA) for the *Coyote Canyon/Dixie Meadows Geothermal Exploration* proposed by Terra-Gen Power (TGP) Dixie Development Company, LLC. The EA will be available for review for a 30-day public comment period. The BLM is accepting written comments on this EA until May 10, 2010

The proposed geothermal exploration projects are located in the western portion of Dixie Valley and are approximately 27 air miles northeast of Fallon, Nevada. This EA analyzes potential impacts from the proposed exploration and testing activities at the CC and DM sites. Because both geothermal drilling projects have similar timing, geography, and types of actions, BLM has determined that the two proposals would be analyzed in one EA. The primary objective of the project is to further evaluate the characteristics of the geothermal resources at the CC and DM project areas. The proposed activities include:

- Constructing new access roads,
- Upgrading existing access roads,
- Constructing up to 15 well pads,
- Drilling and completing slim wells and/or exploration wells,
- Flow testing exploration wells to determine commercial potential,
- Upgrading existing access roads,
- Extracting aggregate material

A copy of this EA is available at www.blm.gov/nv/st/en/fo/carson_city_field.html Please send written comments to: Desna Young, Planning & Environmental Coordinator, Stillwater Field Office, 5565 Morgan Mill Road, Carson City, NV 89701. Comments may also be received via email at desna_young@blm.gov Email should include "Coyote Canyon/Dixie Meadows" in the subject line. A hardcopy can be provided upon request. A copy of the EA is also available in the Carson City District BLM office during the comment period.

Public comments submitted for this proposed project, including names and addresses of those who commented will be available for public review at the Carson City District BLM office during regular business hours 7:30 a.m. to 4:30 p.m., Monday through Friday, except federal holidays. Before including your address, phone number, e-mail address, or other personal information in your comment, you should be aware that your entire comment-including your personal information- may be publicly available at any time. While you ask us in your comment to withhold personal identifying information from public review, we cannot guarantee that we will be able to do so. After the public review period has ended, comments will be analyzed and considered part of the decision-making process. If you have any questions, please contact Desna Young at (775) 885-6078 or at the above address.

Sincerely,

Teresa J. Knutson

Teresa J. Knutson
Manager,
Stillwater Field Office

BLM

ENVIRONMENTAL ASSESSMENT

TGP Dixie Development Company, LLC

Coyote Canyon and Dixie Meadows Geothermal Exploration

DOI-BLM-NV-C010-2010-0010-EA

U.S. Department of the Interior
Bureau of Land Management
Carson City District
Stillwater Field Office
5665 Morgan Mill Road
Carson City, NV 89701
775-885-6000

April 2010

It is the mission of the Bureau of Land Management to sustain the health, diversity, and productivity of the public lands for the use and enjoyment of present and future generations.

DOI-BLM-NV-C010-2010-0010-EA

Contents

Section **Page**

Acronyms and Abbreviations ..... **vii**

Introduction/Purpose and Need **1-1**
1.1 Introduction 1-1
Lease Areas and Rights of Way 1-2
1.2 Purpose and Need 1-3
1.2.1 Purpose 1-3
1.2.2 Need 1-3
1.2.3 Authorizing Actions 1-3
1.3 Land Use Plan Conformance Statement 1-4
1.4 Relationship to Laws, Regulations, Policies, and Other Plans 1-4

Proposed Actions and Alternatives **2-1**
2.1 Proposed Action 2-1
2.1.1 Overview and Location of Proposed Action 2-1
2.1.2 Schedule of Exploration Activities 2-6
2.1.3 Site Access and Road Improvements 2-6
2.1.4 Land Ownership and Rights of Way 2-8
2.1.5 Site Preparation Activities 2-11
2.1.6 Aggregate Supply for Road and Pad Construction 2-13
2.1.7 Water Supply for Grading and Drilling 2-14
2.1.8 Well Pad and Drilling Operations 2-15
2.1.9 Plans for Surface Reclamation 2-18
2.2 No Action Alternative 2-20

Affected Environment **3-1**
3.1 Scoping and Issue Identification 3-1
3.2 Proposed Action 3-1
General Setting 3-1
3.3 Supplemental Authorities and Other Resources 3-1
3.4 Air Quality 3-4
3.5 Cultural Resources 3-4
3.5.1 Coyote Canyon 3-6
3.5.2 Dixie Meadows 3-6
3.6 Native American Religious Concerns 3-7
3.7 Paleontological Resources 3-7
3.7.1 Coyote Canyon 3-8
3.7.2 Dixie Meadows 3-8
3.8 Biological Resources 3-8
3.8.1 Vegetation 3-9
3.8.2 Invasive, Non-native, and Noxious Species 3-10
3.8.3 Migratory Birds 3-10

3.8.4 Special-status Species 3-14
3.8.5 Wildlife Resources 3-20
3.9 Livestock Grazing 3-20
3.9.1 Coyote Canyon 3-20
3.9.2 Dixie Meadows 3-21
3.10 Wastes, Hazardous or Solid 3-21
3.11 Water Quality, Wetlands, and Floodplains 3-21
3.11.1 Coyote Canyon 3-23
3.11.2 Dixie Meadows 3-23
3.12 Geology and Minerals 3-24
3.12.1 Coyote Canyon 3-24
3.12.2 Dixie Meadows 3-24
3.13 Soils 3-24
3.13.1 Coyote Canyon 3-26
3.13.2 Dixie Meadows 3-26
3.14 Visual Resources 3-26
3.15 Lands 3-26
3.15.1 Coyote Canyon 3-27
3.15.2 Dixie Meadows 3-28

Environmental Effects 4-1
4.1 Proposed Actions – Direct and Indirect Impacts 4-1
4.1.1 Air Quality 4-1
4.1.2 Cultural Resources 4-2
4.1.3 Native American Religious Concerns 4-3
4.1.4 Paleontological Resources 4-3
4.1.5 Biological Resources 4-4
4.1.6 Livestock Grazing 4-8
4.1.7 Wastes, Hazardous or Solid 4-9
4.1.8 Water Quality, Wetlands, and Floodplains 4-9
4.1.9 Geology and Minerals 4-11
4.1.10 Soils 4-12
4.1.11 Visual Resources 4-13
4.1.12 Lands and Realty 4-13
4.2 No Action Alternative 4-14
4.3 Residual Impacts 4-14
4.4 Cumulative Impacts Analysis 4-14
4.4.1 Past and Present Actions 4-15
4.4.2 Reasonably Foreseeable Future Actions 4-15
4.4.3 Cumulative Impacts 4-15

Consultation and Coordination 5-1
5.1 Agencies, Groups, and Individuals Contacted 5-1
5.2 List of Preparers 5-1

References 6-1

Appendix

A Geothermal Leases and Stipulations

Tables

1 Coyote Canyon Geothermal Leases
2 Dixie Meadows Geothermal Leases
3 List of Federal and State Permits
4 Coyote Canyon Well Pad Locations
5 Dixie Meadows Well Pad Locations
6 Summary of Disturbed Acreage by Lease Number for Coyote Canyon
7 Summary of Disturbed Acreage by Lease Number for Dixie Meadows
8 Summary of Aggregate Requirements for Coyote Canyon
9 Summary of Aggregate Requirements for Dixie Meadows
10 Supplemental Authorities
11 Other Resources
12 Migratory Bird Species of Concern, Habitat Association, and Presence/Absence of Suitable Habitat in Coyote Canyon
13 Migratory Bird Species of Concern, Habitat Association, and Presence/Absence of Suitable Habitat in Dixie Meadows
14 Nevada BLM Sensitive Species, Habitat Association, and Presence/Absence of Suitable Habitat in Project Areas
15 Livestock Permit Information—Coyote Canyon
16 Livestock Permit Information—Dixie Meadows

Figures

1 Project Location
2 Coyote Canyon Proposed Action Lease Areas
3 Dixie Meadows Proposed Action Lease Areas
4 Typical Well Pad Layout
5 Groundwater Basin 128 (Dixie Valley)
6 Seeps and Springs in Coyote Canyon
7 Water Resources—Dixie Meadows
8 Seeps and Wetlands in Dixie Meadows
9 Soil Map—Coyote Canyon
10 Soil Map—Dixie Meadows

Acronyms and Abbreviations

AFY	acre-feet per year
AUM	animal unit month
BAPC	Bureau of Air Pollution Control
BLM	Bureau of Land Management
BMP	best management practice
CC	Coyote Canyon
CEQ	Council on Environmental Quality
CFR	Code of Federal Regulations
DM	Dixie Meadows
EA	environmental assessment
EIS	environmental impact statement
EPA	U.S. Environmental Protection Agency
FAA	Federal Aviation Administration
FEMA	Federal Emergency Management Agency
FIRM	Flood Insurance Program Mapping
FONSI	finding of no significant impact
GDP	Geothermal Drilling Permit
GHG	greenhouse gas
GIS	geographic information system
H_2S	hydrogen sulfide
HMA	Herd Management Area
kV	kilovolt
LR 2000	Legacy Rehost Report System
MBTA	Migratory Bird Treaty Act
mg/L	milligram(s) per liter
MOA	Military Operating Area
NAAQS	National Ambient Air Quality Standards

NDEP	Nevada Division of Environmental Protection
NDOM	Nevada Division of Minerals
NDWR	Nevada Division of Water Resources
NEPA	National Environmental Policy Act
NILS	National Integration Land System
NPS	National Park Service
NRHP	National Register of Historic Places
NWI	National Wetland Inventory
PEIS	programmatic environmental impact statement
PFYC	Potential Fossil Yield Classifications
PM_{10}	particulate matter smaller than 10 microns in aerodynamic diameter
$PM_{2.5}$	particulate matter smaller than 2.5 microns in aerodynamic diameter
ppm	part(s) per million
RCRA	Resource Conservation and Recovery Act
RMP	Resource Management Plan
SFHA	special flood hazard area
SHPO	State Historic Preservation Office
SPCC	Spill Prevention Control and Countermeasures
SWReGAP	Southwest Regional Gap Analysis Project
TDS	total dissolved solids
TGP	TGP Dixie Development Company
USC	United States Code
USDA NRCS	U.S. Department of Agriculture National Resource Conservation Service
USDI	U.S. Department of Interior
USFWS	U.S. Fish and Wildlife Service
USGS	U.S. Geological Survey
VRM	visual resource management
yd^3	cubic yard

SECTION 1

Introduction/Purpose and Need

1.1 Introduction

This Environmental Assessment (EA) analyzes the potential impacts associated with the proposed construction and testing of geothermal exploration wells, access roads, and ancillary facilities in Dixie Valley, Churchill County, Nevada (Figure 1). TGP Dixie Development Company (TGP) proposes to explore the geothermal resource potential of the Coyote Canyon (CC) and Dixie Meadows (DM) lease areas in Dixie Valley, which are located primarily on federal lands managed by the U.S. Bureau of Land Management (BLM). The BLM is the lead agency for this EA in accordance with the National Environmental Policy Act (NEPA) (40 Code of Federal Regulations [CFR] Parts 1500-1508).

The purpose of the geothermal exploration is to confirm that sufficient reservoir capacity is available to allow long-term production. This EA analyzes potential impacts from the proposed exploration and testing activities at the CC and DM sites. Because both geothermal drilling projects have similar timing, geography, and types of actions, BLM has determined that the two proposals would be analyzed in one EA. The exploration activities are referred to as the Proposed Actions. The geothermal leases held by TGP for the CC exploration project contain 7,681 acres (CC lease area). The geothermal leases held by TGP for the DM exploration project contain 3,960 acres. The Proposed Action for DM also includes an area known as the Lamb Mineral Interests (760 acres). TGP owns the mineral rights for this land, along with the right to surface use in exercise of mineral rights. The U.S. Navy owns the land surface. Although the BLM does not have any jurisdiction to permit any surface activities, and no BLM action is required for exercise of these mineral rights, information on project activities there is included in this EA because they are part of the overall project described for Dixie Meadows.

TGP proposes to conduct geothermal exploration in a portion of each lease area called the project area. Figures 2 and 3 show the lease areas and project areas for each site. (All figures are provided at the end of this report.)

An Operations Plan to drill and test up to 15 explorations wells at the CC project area and to drill and test up to 15 exploration wells at the DM project area was submitted to the Bureau of Land Management (BLM), Stillwater Field Office (SFO) in September 2009. A revised Operations Plan was submitted in October 2009.

In addition to the exploration drilling program, mineral material sales contracts would be required for aggregate material obtained from BLM-managed gravel pits. These contracts (one for CC and one for DM) would be for less than 50,000 cubic yards of aggregate and less than 5 acres of subsurface disturbance each.

Individual Geothermal Drilling Permits (GDPs) would be issued separately from this document.

Lease Areas and Rights of Way

Currently, four leases are committed to the existing Dixie Valley Unit, serial number NVN-43282X: NVN-61705, NVN-61707, NVN-17282, and NVN-17283A.

All of the CC project area and portions of the DM project area are located within the existing Dixie Valley Known Geothermal Resource (KGRA).

Coyote Canyon

Leases held by TGP for the Proposed Action at Coyote Canyon are shown in Table 1. On October 23, 2009, TGP submitted applications for rights-of-ways (ROW) at CC to develop roads between TGP's separate geothermal leases. This off lease action will provide access to certain of the proposed exploration activities between lease numbers N-17282 and N-19283A, between lease numbers N-17283A and N-86892, lease numbers N-61707 and N-17282, and between lease numbers N-61705 and N-17282.

TABLE 1
CC Geothermal Leases

Lease Number	Section Number	Township, Range	Dixie Valley KGRA
N-60687	Section 2	T24N, R36E	Yes
N-60688	Sections 9 and10	T24N, R36E	Yes
N-62956	Sections 16 and 17	T24N, R36E	Yes
N-86892	Section 21	T24N, R36E	Yes
N-17283A	Section 22	T24N, R36E	Yes
N-17282	Sections 14-15 and 23	T24N, R36E	Yes
N-61705	Section 24	T24N, R36E	Yes
N-61707	Sections 12 and 13	T24N, R36E	Yes

Dixie Meadows

Leases held by TGP for the Proposed Action at Dixie Meadows are shown in Table 2. TGP submitted an application on October 23, 2009, for a ROW at DM to develop a road across public lands located off TGP's Geothermal Leases. This off lease action will provide access to certain of the proposed exploration activities. TGP also submitted (October 23, 2009) an application for a right-of-way at DM to develop roads between TGP's separate geothermal leases. This off lease action will provide access to certain of the proposed exploration activities between lease numbers N-60686 and N-60685.

TABLE 2
DM Geothermal Leases

Lease Number	Section Number	Township, Range	Dixie Valley KGRA
N-60686	Sections 17-20	T22N, R35E	No
N-60685	Sections 9-10	T22N, R35E	Yes
	Sections 15-16		No
Lamb Mineral Interest*	Sections 5 and 8	T22N, R35E	Yes
	Sections 17 - 19		No

*TGP owns the mineral rights for this land along with the right to surface use in exercise of mineral rights. The U.S. Navy owns the land surface.

1.2 Purpose and Need

1.2.1 Purpose

The purpose of the Proposed Actions is to explore the geothermal energy production potential of federal lands managed by the BLM and leased by TGP This EA has been prepared by the BLM in accordance with NEPA to assess the potential for environmental impacts resulting from installation and testing of exploration wells at both the CC and DM sites that comprise the Proposed Actions. This EA serves to support the BLM in determining whether the Proposed Actions, with or without any modifications required by the BLM, would result in significant environmental impacts. Based on this determination, a Finding of No Significant Impacts (FONSI) could be made. Alternatively, if significant impacts have the potential to occur, the BLM could determine that an environmental impact statement (EIS) is required. In addition, this EA has been prepared to enable BLM to determine whether to grant a right-of-way to TGP to build the 0.2-mile road segment that is needed at DM to access the leased area from existing roads.

1.2.2 Need

In accordance with the BLM Programmatic Environmental Impact Statement (PEIS) for Geothermal Development (BLM, 2008a) and the Churchill County Master Plan (2005), the expansion and development of geothermal resources is supported and promoted for federal lands in this region in support of the need "to ensure jobs for our future with secure, affordable, and reliable energy. "as identified in the Energy Policy Act of 2005. Additionally, the need for the proposed action is to respond to EO 13212, which directs the BLM to process geothermal leases in a timely manner in order to support efforts to increase energy production from federal minerals, while preserving the health of public lands.

1.2.3 Authorizing Actions

Applications for geothermal drilling upon and rights-of-way across public land submitted to BLM may be approved only after an environmental analysis is completed. BLM decision options include approving one or both of the Proposed Actions as defined in geothermal drilling permit and right-of-way applications as submitted by TGP; approving one or both

of the Proposed Actions with stipulations to mitigate environmental impacts; or denying the Proposed Actions.

1.3 Land Use Plan Conformance Statement

The proposed action and alternatives described below are in conformance with the Carson City Field Office Consolidated Resource Management Plan, May 2001 page MIN-1, Management Action/Decision #1 (Geothermal Exploration), page MIN-1, Management Action/Decision #1 (Mineral Material Sales), and page ROW-1, Management Action/Decision #1 (Access Road Rights-of-Way)."

1.4 Relationship to Laws, Regulations, Policies, and Other Plans

The EA has been prepared in accordance with the following statutes and implementing regulations, policies, and procedures:

- NEPA of 1969, as amended (Public Law [PL] 91-190, 42 U.S.C. 4321 (*et seq.*)
- 40 CFR 1500 (*et seq.*). Regulations for Implementing the Procedural Provisions of NEPA
- Considering Cumulative Effects under NEPA (CEQ, 1997)
- 43 CFR Part 46, Implementation of NEPA of 1969; Final Rule, effective November 14, 2008
- U.S. Department of the Interior (USDI) requirements (Departmental Manual 516, Environmental Quality (USDI, 2008)
- BLM NEPA Handbook (H-1790 1), as updated (BLM, 2008b)
- The Geothermal Steam Act of 1970 (30 USC 1001-1025)
- 43 CFR 3200, Geothermal Resources Leasing and Operations; Final Rule, May 2, 2007
- The 2005 Energy Policy Act; The National Energy Policy, Executive Order 13212, and BMPs as defined in *Surface Operating Standards and Guidelines for Oil and Gas Exploration and Development, Fourth Edition* (Gold Book) (BLM, 2007a)
- The Geothermal Energy Research, Development, Demonstration Act of 1974
- Federal Land Policy and Management Act of 1976, as amended, section 501 [43 USC 1961]
- The Federal Land Policy and Management Act of 1976 (PL 94 579, 43 U.S.C. 1761 (et seq.);
- Rights-of-Way under the Federal Land Policy and Management Act and the Mineral Leasing Act (43 CFR 2880), final Rule, April 22, 2005
- Churchill County Master Plan (2005 Update)
- Carson City District NEPA Compliance Guidebook (Draft) (BLM 2008b)

- Mineral Material Disposals (43 CFR 3601)
- The Act of July 31, 1947, as amended (30 U.S.C. 601 et seq.)
- The U.S. Government is authorized to collect fees and to require reimbursement of its costs, as described in Section 304 of FLPMA [43 U.S.C. 1734] and the Independent Offices Appropriation Act of 1952 [31 U.S.C. 9701]
- *Rights-of-Way, Principles and Procedures; Rights-of-Ways under the Federal Land Policy and Management Act and the Mineral Leasing Act; final Rule April 22, 2005.* (43 CFR 2800)

In 2008, the BLM completed the PEIS for Geothermal Resources Leasing in the Western United States (BLM, 2008a). This PEIS was the foundation for a Record of Decision (ROD) and Resource Management Plan Amendments for Geothermal Resources Leasing in the Western United Stations, (BLM, 2008d). This ROD amended BLM Resource Management Plans, including the Carson City Consolidated RMP (2001), to identify public lands that are administratively and legally closed or open to leasing; and to develop a comprehensive list of stipulations, BMPs, and procedures to serve as consistent guidance for future geothermal leasing and development. Special stipulations developed in the ROD were applied to geothermal resource leases subsequently issued by BLM, including the federal geothermal lease (N-86892) issued to TGP for CC in 2009. The seven other leases for CC (N-17282, N-17283A, N-60687, N-60688, N-61705, N-61707, and N-62956), and the two leases for DM (N-60685 and N-60686) predate issuance of the ROD (BLM, 2008d). The DM leases and four of the leases for CC (N-60687, N-60688, N-61705, and N-62956) do not include any special stipulations relative to geothermal exploration. Copies of the stipulations for all eleven leases are attached to this EA as Appendix A. TGP is required to comply with all lease stipulations.

The Proposed Actions would be subject to other applicable state and local permits listed in Table 3 prior to beginning construction.

TABLE 3
List of Federal and State Permits

Regulatory Agency	Authorizing Action
BLM	Access Road Right-of-Way
BLM	Notice of Intent
BLM	Geothermal Drilling Permit
BLM	Contract for the Sale of Mineral Materials
Nevada Division of Minerals	State Drilling Permit
Nevada Department of Environmental Protection – Bureau of Water Protection Control	Construction Stormwater Permit
Department of Conservation and Natural Resources, Nevada Division of Water Resources	Temporary Consumptive Water Use permit
Nevada Department of Conservation and Natural Resources, Division of Environmental Protection, Bureau of Air Pollution Control	Surface Area Disturbance Permit
BLM, Nevada Division of Historic Preservation and Archaeology	Section 106 compliance with the National Historic Preservation Act.

SECTION 2

Proposed Actions and Alternatives

This section presents the Proposed Actions and the No Action Alternative.

2.1 Proposed Action

TGP proposes to construct up to 15 wells pads at each project site and may drill up to three wells per pad for geothermal resource exploration. TGP would drill either small diameter explorations wells (slim wells) and/or full-size exploration wells (exploration wells). The primary objective of the project is to further evaluate the characteristics of the geothermal resources at the CC and DM project areas. The proposed action consists of:

- Constructing new access roads,
- Upgrading existing access roads,
- Constructing up to 15 well pads,
- Drilling and completing slim wells and/or exploration wells,
- Flow testing exploration wells to determine commercial potential,
- Constructing a temporary personnel camp.

TGP has identified 25 potential well pad sites; however, it is likely that not all potential sites would be drilled because a maximum of 15 wells would be drilled and up to three wells could be drilled per pad. This EA analyzes potential impacts from the proposed exploration and testing activities at both the CC and DM sites.

2.1.1 Overview and Location of Proposed Action

The project sites are located in Dixie Valley, Churchill County, Nevada. Figure 1 shows the project locations for both CC and DM.

The Proposed Actions include drilling up to 15 slim wells and/or exploration wells at each site. Slim wells would be to depths of up to 6,000 feet with a maximum diameter of up to 14 inches and exploration wells would be to depths of up to 10,000 feet with a maximum diameter of approximately 30 inches. Multiple wells could be drilled within the footprint of one well pad which would reduce the total number of well pads to be disturbed. Potential well pad locations and access roads have been placed based on geological information gathered at the sites and with a goal of minimizing environmental impacts. Each drill site would explore a specific geological target. Drill sites were proposed to avoid or minimize environmental issues or constraints identified through the environmental assessment process described in this report.

The wells would be used to provide lithologic and stratigraphic information and to measure the temperature and geochemistry of subsurface fluids at various depths in the wells. Well flow tests would be conducted on selected exploration wells to confirm resource production and generating capabilities and to identify eventual production and injection well top and bottom hole locations.

Following well installation, temperature gradients would be measured and performance testing would be completed in the slim wells and exploration wells. TGP would determine resource production and generating capabilities from the data collected. Drilling operations would be conducted in accordance with BLM and Nevada Division of Minerals (NDOM) regulations and permit requirements. If well conditions warrant changes to the design for completion of a well, any required approval from the responsible regulatory agency would be sought prior to making the changes.

The Proposed Actions also includes construction of access roads, drilling pads and a personnel camp at DM.

2.1.1.1 Coyote Canyon

The CC lease area consists of approximately 7,681 acres in Churchill County, Nevada (Figure 2).

TGP proposes to conduct geothermal exploration in a portion of the lease area called the project area. The CC project area consists of 1,166 acres. Figure 2 shows the CC project area and potential site layout. To maintain flexibility in location of wells, TGP is proposing 25 potential well locations. However, no more than 15 wells would be drilled, resulting in disturbance to a maximum of 15 well pad locations. Specific well locations, potentially including up to three wells at a single drill pad, would be determined during field activities based on observations during drilling. No disturbance would occur at the remaining well pad locations.

The Proposed Action also involves the construction of access roads and drilling pads for conducting exploration drilling activities within the project area. Supporting facilities would also be constructed to support well drilling and testing. The well installation and road construction at the CC site would disturb approximately 73 acres. These facilities are described in Sections 2.1.3 and 2.1.5.

The legal description of the proposed exploration well pad locations at CC and the corresponding Kettleman well numbers is provided in Table 4.

TABLE 4
Coyote Canyon Exploration Well Pad Locations

Lease Number	UTM X	UTM Y	Township Range	Section	Modified Kettleman
N-17282	421136.4936	4422630.6539	24N 36E	15	24-15
N-17282	421578.4295	4422878.1380	24N 36E	15	42-15
N-17282	421993.8492	4423046.0737	24N 36E	15	61-15
N-61705	424486.3676	4421428.5883	24N 36E	24	31-24
N-61705	424123.9802	4421181.1042	24N 36E	24	12-24
N-61705	424318.4320	4420862.9104	24N 36E	24	24-24
N-17282	423885.3348	4420456.3294	24N 36E	23	86-23
N-17282	423849.9799	4420076.2645	24N 36E	23	88-23
N-17282	422983.7856	4420686.1360	24N 36E	23	35-23
N-17282	423089.8502	4420367.9422	24N 36E	23	47-23

TABLE 4
Coyote Canyon Exploration Well Pad Locations

Lease Number	UTM X	UTM Y	Township Range	Section	Modified Kettleman
N-17282	422647.9143	4420146.9743	24N 36E	23	28-23
N-61707	424486.3676	4423638.2678	24N 36E	12	26-12
N-61707	424680.8194	4423541.0419	24N 36E	12	37-12
N-61707	424283.0771	4423373.1062	24N 36E	12	18-12
N-61707	424627.7871	4423072.5898	24N 36E	13	31-13
N-61707	424185.8512	4422886.9768	24N 36E	13	12-13
N-61707	424530.5612	4422745.5573	24N 36E	13	33-13
N-61707	424194.6899	4422568.7829	24N 36E	13	14-13
N-17282	422152.9461	4421923.5565	24N 36E	15	77-15
N-17283A	421949.6556	4421534.6529	24N 36E	22	61-22
N-17283A	421613.7844	4421596.5240	24N 36E	22	51-22
N-17283A	421454.6875	4421260.6527	24N 36E	22	42-22
N-17283A	421101.1387	4421402.0722	24N 36E	22	22-22
N-17283A	420827.1385	4420915.9427	24N 36E	22	14-22
N-86892	420447.0736	4421013.1686	24N 36E	21	74-21

The CC lease area includes approximately 7,681 acres (see Figure 2). Figure 2 also shows the proposed locations of access roads required to reach the potential well locations.

2.1.1.2 Dixie Meadows

The DM lease area consists of approximately 3,960 acres of land leased by BLM, also in Churchill County, Nevada. In addition, exploration activities are proposed on property owned by the U.S. Navy for which TGP holds the mineral rights. This 760-acre parcel is titled "Lamb Mineral Interests" and is shown on Figure 3.

TGP proposes to conduct geothermal exploration in a portion of the lease area called the project area. The DM project area consists of 1,369 acres within the DM lease area. DM project activities also could be conducted within a 47-acre portion of the Lamb Mineral Interests property. Figure 3 shows the DM project area and potential site layout. To maintain flexibility in location of wells, TGP is proposing 27 potential locations at DM (plus one potential location on the Lamb Mineral Interests property). However, no more than 15 wells would be drilled, resulting in disturbance to a maximum of 15 well pad locations. Specific well locations, potentially including multiple wells at a single drill pad, would be determined during field activities based on observations during drilling. No disturbance would occur at the remaining well pad locations.

The Proposed Action also involves the construction of access roads and drilling pads for conducting exploration drilling activities within the project area. Supporting facilities also would be constructed to support well drilling and testing. The well installation and road

construction at the DM site would disturb approximately 68.6 acres, plus up to 4 acres at the Lamb Mineral Interests property.

The legal description of the proposed drill pads and Kettleman well numbers at DM is provided in Table 5. The DM lease area includes approximately 3,960 acres, in addition to 760 acres at Lamb Mineral Interests (Figure 3). Figure 3 also shows the proposed locations of access roads required to reach the potential well locations.

TABLE 5
Dixie Meadows Exploration Well Pad Locations

Lease Number	Description	UTM X	UTM Y	Township Range	Section	Modified Kettleman
N-60685	Well Pad	412164.5992	4403284.0597	22N 35E	15	74-15
N-60685	Well Pad	411935.5075	4403548.9469	22N 35E	15	63-15
N-60685	Well Pad	411326.9829	4403541.7878	22N 35E	15	33-15
N-60685	Well Pad	411112.2096	4403241.1050	22N 35E	15	25-15
N-60685	Well Pad	410675.5037	4403054.9681	22N 35E	16	86-16
N-60685	Well Pad	410883.1179	4402654.0578	22N 35E	15	18-15
N-60685	Well Pad	411369.9376	4402668.3760	22N 35E	15	37-15
N-60685	Well Pad	411778.0071	4402675.5351	22N 35E	15	57-15
N-60686	Well Pad	412207.5538	4402661.2169	22N 35E	15	77-15
N-60685	Well Pad	411756.5297	4403026.3316	22N 35E	15	56-15
N-60685	Well Pad	411706.4159	4403276.9006	22N 35E	15	54-15
N-60685	Well Pad	410002.5471	4405546.3394	22N 35E	9	42-9
N-60685	Well Pad	409923.7968	4405159.7473	22N 35E	9	43-9
N-60685	Well Pad	409830.7283	4404816.1099	22N 35E	9	45-9
N-60685	Well Pad	409744.8190	4404443.8360	22N 35E	9	37-9
N-60685	Well Pad	409587.3185	4403899.7434	22N 35E	16	32-16
N-60685	Well Pad	409458.4545	4403541.7878	22N 35E	16	23-16
N-60685	Well Pad	409336.7496	4403176.6730	22N 35E	16	15-16
N-60685	Well Pad	409179.2491	4402775.7627	22N 35E	16	17-16
N-60686	Well Pad	408935.8392	4402260.3066	22N 35E	20	82-20
N-60686	Well Pad	408749.7023	4401938.1465	22N 35E	20	73-20
N-60686	Well Pad	408542.0880	4401666.1002	22N 35E	20	65-20
N-60686	Well Pad	408277.2008	4401351.0992	22N 35E	20	56-20
N-60686	Well Pad	407962.1999	4401093.3712	22N 35E	20	38-20
N-60685	Well Pad	409709.6076	4405422.6012	22N 35E	9	32-9
N-60685	Well Pad	409287.2199	4403582.7092	22N 35E	16	13-16
N-60686	Well Pad	408163.2392	4401434.9753	22N 35E	20	46-20
Lamb Mineral Interests	Well Pad	409447.0845	4405991.1894	22N 35E	4	28-4

Access to the DM project area would require construction of a new road from the existing dirt road to the lease boundary. At both CC and DM, access roads between individual TGP geothermal leases would be constructed. TGP submitted a right-of-way application (SF 299) for the access road outside the DM lease area and for access roads between TGP leases within CC and DM on October 23, 2009. Within each of the project areas, branch roads, where not already in existence, would be constructed to each individual exploration well

site/drill pad off the main access road. Well construction and access roads are discussed in detail in Sections 2.1.3 and 2.1.4.

2.1.2 Schedule of Exploration Activities

2.1.2.1 Coyote Canyon

The applicant proposes to start exploration drilling activities as soon as possible following BLM approval and NDOM permit issuance. The exploration drilling activities would be completed within 2 years of permit issuance. Reclamation activities would be conducted as described in Section 2.1.9 over an approximately 3-year period following completion of drilling and testing.

2.1.2.2 Dixie Meadows

Exploration drilling activities at Dixie Meadows would begin within approximately one year of issuance of the NDOM permit, and would be completed within 2 years of permit issuance, commensurate with the NDOM permit. Reclamation activities would be conducted as described in Section 2.1.10 over an approximately 3-year period following completion of drilling and testing.

2.1.3 Site Access and Road Improvements

Existing access roads would be used to the extent possible, and upgraded as necessary to support construction and operational vehicle traffic. The primary access to the leased areas would be via U.S. Route 50. From Route 50, Highway 121 leads to the leased areas. Access roads, where not already in existence, would be provided to interconnect the different lease parcels. Branch access roads of the same width and design as the main access road would be constructed to each of the well pad sites. New access roads would be constructed as part of each Proposed Action according to the following specifications:

- Roads would be 25 feet wide, including travel way, shoulders, and drainage ditches. Roadways would have a travel way of 15 feet with 2-foot shoulders and 3-foot drainage ditches on either side. Road designs, including road cross section and crowns, culvert designs and placement, and road plans and profiles would be executed in keeping with the BLM's Gold Book standards (BLM, 2007a).
- Aggregate would be applied to the approximately 19-foot-wide travel way and to road shoulders, with an average of 6 inches of aggregate base course as necessary.
- Turnouts would be located approximately every 1,000 feet and be mutually visible. Turnouts would be 100 feet long and 12 feet wide, with 21-foot transitions on each end of the turnout.
- Rolling dips would be installed as needed along new access roads in areas of low spots or existing ditches. The rolling dips would be designed to accommodate flows from at least a 25-year storm event. The exact locations of rolling dips have not been determined, but would be provided to the BLM when the final design is complete.
- The roads would be graded to follow existing topography to minimize cut-and-fill requirements.

Specific requirements for each project area are described below.

2.1.3.1 Coyote Canyon

Up to 9.6 miles (50,754 linear feet) of main and branch access roads would be constructed at CC for a total disturbance of up to 30.3 acres as shown in Table 6.

Table 6 includes all potential disturbed areas at the CC project area. A description of well pads is provided in Section 2.1.8 below.

TABLE 6
Summary of Disturbed Acreage by Lease Number for Coyote Canyon

Disturbance Type	Length of Access Roads (feet)	Length of Branch Roads (feet)	Dimensions of Disturbed Area	Number of Turnouts	Acres Disturbed[c]
Exploration Well Pad Footprint (Total of 15 Wells)[a]	NA	NA	350 × 350 feet (2.8 acres each)	NA	42.2
Non-potable Water Exploratory Well Pad	NA	NA	150 × 150 feet	NA	0.5
Lease N-17282 Main Access and Branch Roads[b]	26,233	5,600	31,833 × 25 feet	26	19.1
Lease N-17283A Main Access and Branch Roads[b]	8,271	1,404	9,675 × 25 feet	8	5.8
Lease N-61707 Main Access and Branch Roads[b]	3,354	2,837	6,191 × 25 feet	3	3.6
Lease N-61705 Main Access Road and Branch Roads[b]	0	2,071	2,071 × 25 feet	0	1.2
Lease N-86892 Main Access and Branch Roads[b]	984	0	984 × 25 feet	1	0.6
Total Disturbed Acreage					**73.0**

[a] The well pad dimensions include space for storage of drilling equipment, drilling vehicles, and storage of topsoil and spoil material. Laydown areas that would be required for drilling operations would be located on each of the well pads as indicated on Figure 4.
[b] Total disturbed acreage for the roads includes (1) the approximate length of the new roads from the closest existing road to the well pad served by the road and (2) turnouts (12 by 100 feet) be located approximately every 1,000 feet along access roads. Each turnout measures 12 by 100 feet with 21-foot transitions at each end.
[c] The exact location for the turnouts and roads within each lease area would be verified using GPS and submitted to the BLM before construction.

NA = not applicable

2.1.3.2 Dixie Meadows

Approximately 8.9 miles (46,853 linear feet) of access road would be constructed on BLM-managed public land, disturbing approximately 28.2 acres. In addition, approximately 0.2 miles (1,182 linear feet) of access road would be constructed on BLM-managed public lands between Highway 121 and the leased area, with an associated disturbance of approximately 0.7 acres. The total disturbance due to construction of access roads on BLM-managed public land would be approximately 28.9 acres as shown in Table 7.

Access to the potential well pad location on the Lamb Mineral Interests property would require construction of a road approximately 0.4 miles (1,939 feet) long. Construction of this road would disturb approximately 1.2 acres on the Lamb Mineral Interests property.

Table 7 includes all potential disturbed areas at the DM project area. A description of well pads is provided in Section 2.1.8 below.

TABLE 7
Summary of Disturbed Acreage by Lease Number for Dixie Meadows

Disturbance Type	Length of Access Roads (feet)	Length of Branch Roads (feet)	Dimensions of Disturbed Area	Number of Turnouts	Acres Disturbed[c]
Exploration Well Pad Footprint (Total of 14 Wells on BLM-managed public land)[a]	NA	NA	350 × 350 feet (2.8 acres each)	NA	39.2
Non-potable Water Exploratory Well Pad	NA	NA	150 × 150 feet	NA	0.5
Off-lease Main Access Road[b]	1,182	0	1,182 × 25 feet	1	0.7
Lease N-60685 Main Access and Branch Roads[b]	26,152	5,459	31,611 × 25 feet	26	19.0
Lease N-60686 Main Access and Branch Roads[b]	14,216	1,026	15,242 × 25 feet	14	9.2
Total Disturbed Acreage (BLM-Managed Public Land):					**68.6**
Exploration Well Footprint (Total of 1 Well on Lamb Mineral Interests property)[d]	NA	NA	350 x 350 feet (2.8 acres each)	NA	2.8
Lamb Mineral Interests Main Access and Branch Roads[b, d]	1,939	0	1,939 × 25 feet	2	1.2
Total Disturbed Acreage (Lamb Mineral Interests):					**4.0**

[a] The well pad dimensions include space for storage of drilling equipment, drilling vehicles, and storage of topsoil and spoil material. Laydown areas that would be required for drilling operations would be located on each of the well pads as indicated on Figure 4.
[b] Total disturbed acreage for the roads includes (1) the approximate length of the new roads from the closes existing road to the well pad served by the road and (2) turnouts (12 by 100 feet) be located approximately every 1,000 feet along access roads. Each turnout measures 12 by 100 feet with 21-foot transitions at each end.
[c] The exact location for the turnouts and roads within each lease area would be verified using GPS and submitted to the BLM before construction.
[d] The acreage of disturbance on the Lamb Mineral Interests property is included for completeness. However, no NEPA decision is required for this action.

Note:

NA = not applicable

2.1.4 Land Ownership and Rights of Way

The exploration wells and access roads at DM and CC would be located on land primarily administered by the BLM and leased for exploration activities to TGP.

2.1.4.1 Coyote Canyon

Because Highway 121 passes through the CC site, no new access roads outside the existing lease areas would be needed.

TGP has submitted applications for ROW at CC to develop eight roads between TGP's separate geothermal leases (October 23, 2009). This off lease action will provide access to certain of the proposed exploration activities between lease numbers N-17282 and N-19283A, between lease numbers N-17283A and N-86892, lease numbers N-61707 and N-17282, and between lease numbers N-61705 and N-17282 (Figure 2).

An approximately 0.2 mile of new off lease road section would allow access to proposed well 51-22 as follows:

- Beginning off of existing Highway 121 and traveling southeasterly through the SE¼SW¼ of Section 15, T24N, R36E; and
- Terminating at the NE¼NW¼ of Section 22, T24N, R36E, the northern boundary of lease N-17283A.

An approximately 0.7 mile of new off lease road section would allow access to proposed well 35-23 as follows:

- Beginning at the northern boundary of NE¼NW¼ of Section 22 T34N, R36E and traveling about 0.4 mile southeasterly through the N½ of Section 22, T24N, R36E and then traveling about 0.3 mile easterly through S½NE¼ of Section 22, T24N, R36E; and
- Terminating at the SW¼NW¼ of Section 23, T24N, R36E, the eastern boundary of lease N-17282.

An approximately 0.6 mile of new off lease road section would allow access to proposed well 74-21 as follows:

- Beginning at the NE¼NW¼ of Section 22, T24N, R36E, and traveling southwesterly through the NW¼ of Section 22, T24N, R36E; and
- Terminating at the SE ¼ NE ¼ of Section 21, T24N, R36E, the eastern boundary of lease N-86892.

An approximately 0.2 mile of new off lease road section would allow access to proposed well 77-15 as follows:

- Beginning at the NW¼NE¼ of Section 22, T24N, R36E and traveling northeasterly through the NW ¼ NE ¼ of Section 22, T24N, R36E; and
- Terminating at the SW¼SE¼ of Section 15, T24N, R36E.

An approximately 1.6 miles of new off lease road section would allow access to proposed well 14-13 as follows:

- Beginning at the SW¼SE¼ of Section 15, T24N, R36E and traveling about 0.3 mile northerly through the S½SE¼ of Section 15, T24N, R36E and then traveling about 1.3 miles northeasterly through Section 15, T24N, R36E; and
- Terminating at the SW¼NW¼ of Section 13, T24N, R36E.

An approximately 1.3 miles of new off lease road section would allow access to proposed well 24-24 as follows:

- Beginning at the SW¼NW¼ of Section 23, T24N, R36E and traveling about 0.3 miles easterly through the W¼ of Section 23, T24N, R36E and traveling about 0.1 mile southerly through the NE¼SW¼ of Section 23, T24N, R36E and traveling about 0.5 miles generally easterly through the S½ of Section 23, T24N, R36E and traveling about 0.3 mile northeasterly through the E¼ of Section 23, T24N, R36E and traveling about 0.1 mile easterly through the SE¼NE¼ of Section 23, T24N, R36E; and
- Terminating at the SW¼NW¼ of Section 24, T24N, R36E.

An approximately 0.2 mile of new off lease road section would allow access to proposed well 12-24 as follows:

- Beginning at the SE¼NE¼ of Section 23, T24N, R36E and traveling northerly through the SE¼NE¼ of Section 23, T24N, R36E and easterly through the E½NE¼ of Section 23, T24N, R36E; and
- Terminating at the W½NW¼ of Section 24, T24N, R36E.

An approximately 0.2 mile of new off lease road section would allow access to proposed well 31-24 as follows:

- Beginning at the E½NE¼ of Section 23, T24N, R36E and traveling northerly through the NE¼NE¼ of Section 24, T24N, R36E and easterly through the NE¼NE¼ of Section 24, T24N, R36E; and
- Terminating at the NW¼NW¼ of Section 24, T24N, R36E.

The total length for the requested ROWs for the CC lease area is approximately 5.0 miles.

2.1.4.2 Dixie Meadows

DM traffic would be routed from Highway 121 to the west via a proposed new access road, as shown on Figure 3. A portion of this road, approximately 0.2 mile, would be constructed outside the existing lease area (Figure 3). TGP has submitted a ROW application at DM to develop a road across public lands located off TGP's Geothermal Leases (October 23, 2009). This off lease action would provide access to certain of the proposed exploration activities.

An approximately 0.2 mile of new off lease road section would allow access to geothermal lease N-60686 as follows:

- Beginning off of existing Highway 121 and traveling southeast through the NW¼NE¼ of Section 18, T22N, R34E; and
- Terminating at the NE¼NE¼ of Section 18, T22N, R34E, the northern boundary in Section 18, T22N, R34E of lease N-60686.

TGP also submitted ROW applications at DM to develop three roads between TGP's separate geothermal leases (October 23, 2009). This off lease action would provide access to certain of the proposed exploration activities between lease numbers N-60686 and N-60685 and the Lamb Mineral Interest lease.

An approximately 0.3 mile of new road section would allow access from geothermal lease N-60686 to the Lamb Mineral Interest Lease as follows:

- Beginning where the new "off lease" access road terminates at the northern boundary of Section 18, T22N, R34E and traveling southeasterly through the SE¼NE¼ of Section 18, T22N, R34E; and
- Terminating at the NW¼SW¼ of Section 17, T22N, R34E, the northwestern boundary of the Lamb Mineral Interest lease.

An approximately 1.0 mile of new road section would allow access from geothermal lease N-60686 to proposed well number 17-16 as follows:

- Beginning on the northern boundary of the SW¼SW¼ of Section 17, T22N, R34E and traveling easterly through the S¼ of Section 17, T22N, R34E; and
- Terminating at the SE¼SE¼ of Section 17, T22N, R34E, the eastern boundary of lease N-60686.

An approximately 2.0 miles of new road section would allow access from geothermal lease N-60685 to proposed well 28-4 as follows:

- Beginning on the western boundary of the SW¼SW¼ of Section 16, T22N, R34E and traveling about 1.7 miles northerly through the W¼ of Section 16, T22N, R34E and northerly through the W ½ of Section 9, T22N, R34E to well 42-9 and about 0.3 mile northwesterly through the N½NW¼ of Section 9, T22N, R34E; and
- Terminating at the SW¼SW¼ of Section 4, T22N, R34E, the southern boundary of the Lamb Mineral Interest.]

The total length for the requested ROWs for the DM lease area is approximately 3.5 miles.

At DM, a portion of the project area (Lamb Mineral Interests) extends into land owned by the Navy. The mineral rights with surface use for this land were purchased by Oxbow Geothermal in 1988 and subsequently acquired by Nevada Power Vestors (a wholly owned subsidiary of TGP). The deed for mineral rights includes a provision for surface access and no additional rights are required to develop this resource.

2.1.5 Site Preparation Activities

Site preparation activities would include setup of a personnel camp and transport and staging of equipment required for exploratory drilling. Staging areas would be established at the Personnel Camp and at the initial well pad locations. In addition, measures would be set up to ensure proper management of hazardous materials and wastes that would be used and generated during implementation of the Proposed Actions. These measures would be the same for both CC and DM.

2.1.5.1 Personnel Camp

During drilling operations at both CC and DM, a temporary worker camp would be set up at an existing graded area located within the CC lease area to provide accommodations for drill crews and subcontractors. The existing graded area, which was developed as part of the existing Terra-Gen Dixie Valley geothermal power plant, is located between proposed

Wells 75-15 and 14-13. An existing road would be used to gain access to the camp. The location of the personnel camp is depicted in Figure 2. Because this area has previously been graded and prepared, no additional area would be disturbed for use of the personnel camp.

The camp would comprise self-contained trailers used for offices and prefabricated modules (estimated size up to 12 by 60 feet) for lodging. The camp would typically comprise one to two sleeping modules with a centralized kitchen, dining, and recreational area. The camp components would be transported to the site by trailer along the existing access road and proposed access roads. Up to two portable water tanks would supply water for sanitary use, and drinking water would be bottled water. Sanitary storage tanks would be provided as part of the modules and would be periodically serviced by a commercial entity. Electricity would be provided by up to two portable generators. Because the camp would be placed on an existing disturbed area, no new surface grading would be required to create the camp.

Communication among field operations, TGP offices, BLM, and NDOM offices would be maintained using radio and satellite telephones. Support facilities and equipment would be located on the personnel camp pad.

2.1.5.2 Equipment

Each drill site would be prepared to create a level pad for the drill rig and a graded surface for the support equipment. Support equipment used during exploratory drilling activities includes:

- Standby and start-up diesel generator
- Air compressors
- Geothermal rotary drilling rigs
- Personnel vehicles (pick-up trucks)
- Construction equipment, including dump trucks, road graders, and bulldozers

2.1.5.3 Staging Areas

Equipment and supplies required for implementation of the Proposed Actions would be staged either at the Personnel Camp, at the active well pad, or at an inactive well pad location. No additional areas would be disturbed beyond those shown in Tables 6 and 7. In particular, no more than 15 well pad locations would be disturbed either by construction of well pads or by temporary use as staging areas.

2.1.5.4 Waste and Hazardous Materials Management

Secondary containment structures would be provided for all chemical and petroleum/oil storage areas during drilling operations. Additionally, absorbent pads or sheets would be placed under likely spill sources and spill kits would be maintained onsite during construction and drilling activities to provide prompt response to accidental leaks or spills of chemicals and petroleum products.

Small quantities of solid wastes (paper, plastic, and other garbage) generated by the Proposed Actions would be transported offsite to an appropriate landfill facility. Portable chemical toilet wastes would be removed by a local contractor.

A project hazardous material spill and disposal contingency plan would describe the methods for cleanup and abatement of any petroleum hydrocarbon or other hazardous material spill. The hazardous material spill and disposal contingency plan would be submitted to and approved by the BLM and made readily available onsite before operations begin.

Handling, storage, and disposal of hazardous materials, hazardous wastes, and solid wastes would be conducted in conformance with federal and state regulations to prevent soil, groundwater, or surface water contamination and associated adverse effects on the environment or worker health and safety.

The following measures would be taken to prevent the spread of invasive, non-native species:

- Clean construction equipment prior to project work (may be washed in Fallon prior to deployment)
- Avoid or treat existing weed infestations prior to disturbance.
- Any areas that become infested with weeds during construction would be mapped and treated.

2.1.6 Aggregate Supply for Road and Pad Construction

Where needed, TGP would obtain aggregate material for the road and well pad surfaces at DM and CC from pits near the project sites, such as the BLM Cottonwood Canyon Pit. Aggregate obtained from private sources may also be considered. Potential aggregate source locations are shown on Figure 2. In addition to the exploration drilling program, mineral material sales contracts would be required for aggregate material obtained from BLM-managed gravel pits. These contracts (one for CC and one for DM) would be for less than 50,000 cubic yards of aggregate and less than 5 acres of subsurface disturbance each. TGP would acquire approval from BLM prior to use of aggregate under categorical exclusions from BLM pits. Tables 8 and 9 summarize the anticipated access road and well pad aggregate needs for CC and DM, respectively.

2.1.6.1 Coyote Canyon

TABLE 8
Summary of Aggregate Requirements for Coyote Canyon

	Length	Width	Depth	Aggregate	Total Aggregate
CC Access Roads (includes branch roads)	9.6 miles	19 feet	6 inches	1,967 yd^3/mile	18,905 yd^3
CC Observation Well Pads Centerline (15)	110 feet	350 feet	8 inches	951 yd^3/pad	14,265 yd^3
CC Well Footprints (15)	40 feet	40 feet	18 inches	89 yd^3/well	1,335 yd^3
Total Aggregate for CC					**34,505 yd^3**

yd^3 = cubic yard

2.1.6.2 Dixie Meadows

TABLE 9
Summary of Aggregate Requirements for Dixie Meadows

	Length	Width	Depth	Aggregate	Total Aggregate
DM Access Roads (includes branch roads) on BLM Lands	41,550 feet	19 feet	6 inches	1,967 yd^3/mile	15,479 yd^3
DM Observation Well Pads Centerline on BLM Lands (14)	110 feet	350 feet	8 inches	951 yd^3/pad	13,314 yd^3
DM Well Footprints on BLM Lands (14)	40 feet	40 feet	18 inches	89 yd^3/well	1,246 yd^3
Total Aggregate for DM – BLM Lands					**34,336 yd^3**
DM Access Roads (includes branch roads) on Lamb Mineral Interests*	1,939 feet	19 feet	6 inches	1,967 yd^3/mile	722 yd^3
DM Observation Well Pads Centerline on Lamb Mineral Interests (1)*	110 feet	350 feet	8 inches	951 yd^3/pad	951 yd^3
DM Well Footprints on Lamb Mineral Interests (1)*	40 feet	40 feet	18 inches	89 yd^3/well	89 yd^3
Total Aggregate for DM – Lamb Mineral Interests					**1,762 yd^3**

yd^3 = cubic yard

* Aggregate requirements for Lamb Mineral Interests properties are included for completeness. However, these activities are not subject to BLM action.

2.1.7 Water Supply for Grading and Drilling

Water would be required for drilling operations and for construction and compaction of roads, pads, reserve pits, and dust control. Up to 20,000 gallons per day could be required for each exploration well throughout the 8-week period in which drilling would occur. Slim wells would require less. One or more portable water tanks holding a combined total of at least 10,000 gallons but not more than 60,000 gallons would be maintained on the well sites during drilling activities. TGP would obtain water from TGP's nearby existing Terra-Gen Dixie Valley geothermal power facility and truck it to the DM and CC project sites, as needed.

TGP would also install two non-potable water exploratory wells, one at DM and one at CC, to determine the availability of water and the quality of available water for future activities under waiver for the temporary use of groundwater from the Nevada Department of Water Resources. Water wells would be temporary, drilled by a licensed water well driller, and plugged and abandoned in accordance with NAC 534.420. The surficial groundwater aquifer is expected to be at a depth of up to 500 feet below ground surface. The non-potable water exploratory well would be permitted with the Nevada Division of Water Resources (NDWR) before drilling. TGP would locate each exploratory well within the project area. It is estimated that a pad measuring 150 by 150 feet (0.5 acre) would be required to support drilling for each water supply well. In addition, a reserve pit for drill cuttings and pump test water would be required. The reserve pit would measure approximately 50 feet long by 15

feet wide by 10 feet deep. The exact location of each water supply well has not been determined, but each would be located in the project areas. The nonpotable well reserve pits would be maintained subsequent to drilling for the storage of non-potable water to use for activities such as dust suppression. No new roads would need to be constructed to install the water supply wells.

2.1.8 Well Pad and Drilling Operations

This section describes construction of well pads, which would be constructed at each location where slim wells and/or exploration wells would be drilled, along with a summary of the drilling process. Well pad construction and drilling processes would be the same at both CC and DM.

2.1.8.1 Well Pad Layout and Design

Figure 4 shows a typical well pad layout for slim wells and exploration wells. Each well pad would be 350 by 350 feet. The well pad would accommodate the drilling rig, reserve pit, and support equipment and vehicles necessary during drilling. Exact dimensions and orientations of the individual well pads would be determined by engineers in the field prior to construction to best match the physical and environmental characteristics of the specific site and to minimize grading. The proposed well pad locations are in the relatively flat Dixie Valley with topography that gently slopes southeast toward the Humboldt Salt Marsh (Figures 2 and 3). Because of the existing suitable topography, well pads would not be constructed on steep slopes or narrow ridges. Any fill slopes potentially constructed as a part of well pad grading would be designed with a maximum slope of 2 horizontal to 1 vertical. Slopes would be compacted and maintained to minimize erosion and provide slope stability. The natural washes within the DM and CC lease areas are ephemeral, with intermittent flows only from substantial rainfall or snowmelt events. The well pads would be constructed to avoid the ephemeral washes to the extent practicable. The well pads would be graded so that cut-and-fill requirements would be balanced and no offsite fill material would be needed.

After the well pad area has been graded and spoils from the well pad reserve pit excavation have been laid down for leveling, an average of 8 inches of gravel would be placed over the areas where the drilling work would be conducted, an area of approximately 110 by 350 feet. The well footprint (40 by 40 feet) would require additional stabilizing for heavier equipment and would receive an additional 10 inches (for a total average of 18 inches) of compacted aggregate (Figure 4).

A reserve pit would be excavated on each well pad for the storage of drilling muds and fluids, flow test fluids, and drill cuttings in accordance with the applicable BMPs identified in the *Surface Operating Standards and Guidelines for Oil and Gas Exploration and Development Activities* (Gold Book) (BLM, 2007a). Each reserve pit would have up to 1 million gallons of capacity and the interior would measure approximately 320 feet long, 125 feet wide, and a minimum of 5.34 feet deep below grade, including at least 2 feet of freeboard. The actual excavation depth for each reserve pit would be determined based on the depth to groundwater to ensure that the bottom of the reserve pit is above the standing water level. Reserve pits would be compacted during construction, and settled bentonite clay from drilling mud would accumulate on the bottom of the reserve pit to act as an unconsolidated clay liner to minimize percolation. A berm would be constructed around the outer edges of

the reserve pit. The berm would measure approximately 4 feet wide by 2 feet tall. Material from reserve pit excavation would be used in the construction of the berm. Stormwater runoff from undisturbed areas around the constructed drill pads would be directed into ditches surrounding the well pad and back onto undisturbed ground consistent with BMPs for stormwater. Each well pad would be graded to prevent the movement of stormwater from the constructed site. Topsoil and spoils from the excavated reserve pit would be stockpiled on the well pad laydown area.

During active drilling, each well pad would include pipe racks, temporary water storage tanks, a fuel storage area with secondary containment, and chemical toilets.

Depending on well production rates identified during flow testing, additional sump capacity may be required. To provide this capacity, TGP would use existing sumps at its Dixie Valley geothermal power plant located approximately 2.5 miles north of the CC site and approximately 10.5 miles north of the DM site along Dixie Valley Road. Excess fluids from flow testing each well would be trucked to the reserve pits at the Dixie Valley site.

Fencing, netting, or other measures would be provided in accordance with Gold Book standards at each well pad to prevent access to the pits and well pad drilling areas by wildlife, domestic livestock, and the public (BLM, 2007a).

Well Pad Disturbed Areas

The Proposed Actions include development of up to 15 slim and/or exploration wells in each project area. Figures 2 and 3 show potential locations for the wells at CC and DM. Revisions to the specific proposed well locations within the project areas could occur as new information becomes available from initial drilling and testing results. Disturbance calculations for each well pad shown in Tables 6 and 7 include staging and laydown requirements for equipment, supplies, and stockpiled soil and aggregate required for well drilling and access road construction. No additional disturbance would occur for staging and storage requirements.

Coyote Canyon

Construction of each of the well pads would disturb up to 2.8 acres, for a total of up to 42.2 acres of disturbance for the 15 wells at Coyote Canyon. Table 6 presents the acreage of disturbance associated with exploration well pads, including staging areas.

Dixie Meadows

Up to 39.6 acres would be disturbed for construction of the well pads on BLM-managed public land at Dixie Meadows. Up to 2.8 additional acres would be disturbed on the Lamb Mineral Interests property. Table 7 presents the acreage of disturbance associated with well pads, including staging areas.

2.1.8.2 Drilling Operations

A detailed geothermal drilling program would be submitted to the BLM for review and approval prior to beginning operations. This section summarizes drilling activities for slim wells and exploration wells for purposes of evaluating potential environmental consequences. If necessary, the BLM may include additional provisions or conditions needed to address environmental concerns or other site-specific issues with the geothermal drilling permit.

Each well would be drilled using a large diesel rotary drilling rig with a power rating ranging from 1,000 to 3,000 horsepower. During drilling, the top of the drill rig derrick would be up to 160 feet above the ground surface, depending on the rig used. The typical drill rig and associated support equipment (rig floor and stands; draw works; mast; drill pipes; trailers; mud, fuel, and water tanks; diesel generators; air compressors) would be brought to the prepared pad on seven to ten large tractor-trailer trucks. An average of six to eight small trucks/service vehicles/workers' vehicles could be driven to the active well site each day throughout the typical 8-week drilling process. Site-specific conditions encountered during the drilling process, including the need to work over or to re-drill the hole, could double the time necessary to complete a full-size exploration well. Drilling would be conducted 24 hours per day, 7 days per week by a crew of up to 12 workers per well. Typically, one drill rig would be onsite at a time but TGP may choose to drill up to three wells at once, bringing the total crew to as many as 36. Crews would include the drilling supervisor, geologists, suppliers, and operators.

Well stimulation operations could involve placing a dilute mixture of hydrochloric (muriatic) acid down the well. The amount of dilute acid placed in the well bore (which can vary from 10,000 gallons to 50,000 gallons or more) is determined by calculating the amount of each type of mineral to be dissolved. Concentrated (35%) hydrochloric acid would be trucked to the site and mixed onsite with water by experienced contractors. The dilute acid mixture is placed in the cased well bore, followed by water to push the mixture into the geothermal reservoir. After dissolving the minerals in the geothermal reservoir, the water and now-spent acids are flowed back through the well to the surface where they are tested, neutralized if necessary (using sodium hydroxide or crushed limestone or marble), and discharged to the reserve pit.

Standard aquifer testing procedures would be employed at targeted depth intervals as the boreholes for exploration wells are advanced. The vertical boundaries of the aquifers, the depth of aquifers (non-thermal and thermal) penetrated during drilling, would be noted from the drilling log. The horizontal boundaries would be noted if any are reflected on time-drawdown plots produced during aquifer testing. Borehole geophysics analysis would be conducted from the ground surface to the total depth of the borehole. Aquifer testing would be used to determine drawdown associated with pumping. If possible, an assessment of whether the aquifer is confined or unconfined would be made, as well as an estimate of aquifer thickness and a qualitative assessment of its relative productivity. The temperature of penetrated aquifers would be noted.

Upon completion of the drilling operations, clean-out and flow tests would be performed on the wells. Flow testing would typically run for an average of 3 days (24 hours a day) for each well, but the duration may vary depending on well characteristics. During these tests, the flow would be routed to the reserve pits. It is anticipated that the initial flow rates of fluid from each well into its reserve pit would be approximately 500 to 1,500 gallons per minute, on average, depending on the productivity of the well.

Selected seeps and springs, determined in consultation with BLM, would be monitored for basic water quality, flow, and temperature prior to and during the Proposed Actions.

Secondary containment structures would be provided for all chemical and petroleum/oil storage areas during drilling operations. Additionally, absorbent pads or sheets would be

placed under likely spill sources and spill kits would be maintained onsite during construction and drilling activities to provide prompt response to accidental leaks or spills of chemicals and petroleum products.

TGP may decide to conduct directional drilling at each site based on the location and extent of geothermal resources in proximity to the well site. Directional drilling would likely result in a deep bottom hole located under BLM lease areas. TGP Geothermal Drilling Permit applications would be submitted to the BLM for the drilling of these wells, pursuant to 43 CFR 3260.11.

2.1.9 Plans for Surface Reclamation

If exploration activities confirm the expected commercial viability of the resource, TGP plans to build and operate a geothermal power plant to generate and sell renewable energy at both DM and CC. In that case, TGP would submit an application for regulatory approvals to place the wells, associated access roads, and other components required to operate the facility into commercial service. The wells would be monitored and exploration activities would continue in accordance with these plans while the application is processed. Interim reclamation activities would be implemented, as described in the following section. TGP would reassess the usefulness of wells annually, and if TGP were to judge certain wells to be unsuitable for commercial use or monitoring, they would be plugged and abandoned in conformance with the procedures for final reclamation outlined below.

Interim and final reclamation activities proposed in this section conform to BLM and NDOM requirements, including BLM Gold Book recommendations (BLM, 2007a). A final drill site/access road reclamation plan may be developed depending upon final well locations (BLM, 2007a) and as required by BLM. The following information is provided for purposes of evaluating potential environmental impacts from the Proposed Action.

Reclamation could also be required for the aggregate source area and would be described and conducted in accordance with a separate plan as part of permits and sale agreements issued for that purpose.

BLM will include any additional provisions and conditions needed to address environmental concerns or other site-specific issues with the GDP. Surface reclamation procedures would be the same for both CC and DM.

2.1.9.1 Interim Reclamation

During the life of the project, all disturbed areas not needed for active support of operations would undergo interim reclamation within 3 years of completion of well testing. During the construction process, topsoil would be salvaged where possible and stockpiled for use during reclamation. Following completion of well testing, drilling and testing equipment would be removed from the site. With the exception of an area required to gain access to maintained wellheads, cut-and-fill slopes would be recontoured to a final or intermediate contour that blends with the surrounding topography, and erosion control BMPs would be implemented. TGP would maintain healthy, biologically active topsoil and minimize habitat, visual, and forage loss during the life of the wells by stockpiling and/or spreading any extra salvageable topsoil over the area of interim reclamation whenever possible.

Surface facilities remaining onsite for wells would consist of a wellhead and potential monitoring equipment. Following completion of testing activities, the well would be fenced, chained, and locked. Wells could be shut in with a mineral oil cap as applicable. Pressure and temperature sensors could be installed in the well at fixed depths to monitor any changes in these parameters over time. The well pads and access roads would be left in place and subject to regular inspection and maintenance by TGP personnel. Portions of the access roads not needed for future vehicle travel may be reclaimed as part of interim reclamation processes. If the well pad is deemed by TGP to be unnecessary or the geothermal lease is released back to the BLM, whichever occurs first, then final reclamation activities would be conducted as described below (Section 2.1.9.2).

The temporary groundwater well would either be abandoned following completion of exploration activities, in accordance with Nevada regulations, or could be converted to permanent use for the facility. If the well is suitable for long-term use, TGP would obtain the necessary permits from the Nevada State Engineer prior to such use.

2.1.9.2 Final Reclamation

Final reclamation would consist of two steps: well reclamation and road reclamation.

Road Reclamation. Following completion of project activities, access roads would be reclaimed by recontouring, reseeding, and controlling noxious weeds, unless the BLM requests that the roads remain intact. Project-related equipment and machinery would be decommissioned and, where possible, reused or sold as salvage. Equipment with no resale value would be sold or donated as scrap.

TGP would restore the area to the original landform or, if restoration of the original landform is not feasible, recontour to blend in with the surrounding landform. Disturbed areas would be reseeded with a certified weed-free mix specified by the BLM at the time of reclamation, and erosion-control measures and measures to control invasive non-native plants and noxious weeds would be implemented in accordance with appropriate BLM guidelines.

Well Site Reclamation. Well site reclamation will be performed on all wells not required for geothermal production and would be abandoned in accordance with BLM and Nevada State regulations. TGP would reclaim the project area by plugging and abandoning the wells in compliance with BLM and NDOM regulations. A detailed plan for well plugging and abandonment would be analyzed in TGP's Application to Drill (GDP). The GDP is required by 43 CFR 3261 to be submitted by TGP prior to conducting drilling operations. The area would be recontoured to blend with the surrounding topography. TGP would resurface well pads with stockpiled topsoil where available, and reseed with a mix specified by the BLM and free of noxious weeds at the time of reclamation. Any rolling dips that may have been installed would be removed. Project-related equipment and machinery would be decommissioned and, where possible, reused or sold as salvage. Equipment with no resale value would be sold or given as scrap.

TGP would restore the area to the original landform or, if restoration of the original landform is not feasible, recontour to blend in with the surrounding landform during reclamation activities. If available, topsoil would be spread evenly over the surfaces of the disturbed areas and be reseeded with a mix specified by the BLM at the time of reclamation,

and erosion-control measures and measures to control invasive non-native plants and noxious weeds would be implemented in accordance with appropriate BLM guidelines. Where areas have been surfaced with gravel, the gravel would be buried deep in the recontoured cut to prevent possible surface exposure, and reserve pits would be backfilled after they are dry and then graded to conform with the surrounding terrain.

2.2 No Action Alternative

Section 1502.14(d) of NEPA's implementing regulations requires the alternatives analysis to "include the alternative of no action" as a baseline against which to assess impacts of the Proposed Actions.

Under the No Action alternative, BLM would not issue a geothermal drilling permit for the CC Proposed Action and/or would not issue a geothermal drilling permit and access road right-of-way for the DM Proposed Action. As a consequence, TGP would not perform exploratory well drilling and testing in support of developing existing geothermal resources in conformance with existing lease conditions for the CC or DM lease areas.

SECTION 3

Affected Environment

3.1 Scoping and Issue Identification

The BLM Stillwater Field Office held an interdisciplinary team (IDT) meeting on November 2, 2009. The following issues were identified as needing to be addressed in the environmental assessment: Air Quality; Cultural Resources; Invasive, Nonnative and Noxious Species; Migratory Birds; Native American Religious Concerns; Wastes; Water Quality; Wetlands/Riparian Zones; Visual Resources; Noise; Soils; Vegetation; Geology/Minerals; Livestock Grazing; Wildlife; and Special Status Species. Subsequent evaluation determined that noise did not need to be addressed in the environmental assessment because no receptors are present in the vicinity of the site; and that Lands should be addressed to clearly delineate land ownership status and resulting issues for the Proposed Action at DM.

The following issues were identified as not being present in either of the proposed Project areas: Areas of Critical Environmental Concern; Environmental Justice; Farm Lands; Floodplains; Threatened and/or Endangered Species; Wild and Scenic Rivers; and Wilderness. Threatened and Endangered Species are discussed in this EA to clearly lay out the reason for a conclusion of no impact to this resource, in accordance with the Endangered Species Act.

3.2 Proposed Action

General Setting

Both project areas are located in the western portion of Dixie Valley and are approximately 27 air miles northeast of Fallon, Nevada. The western edge of Dixie Valley is defined by the Stillwater Range and the eastern edge is defined by the Clan Alpine Mountains.

Coyote Canyon

The CC project area is located at elevations ranging from approximately 3,400 feet to 3,600 feet in the northern part of Dixie Valley.

Dixie Meadows

The proposed DM project area is located in the west-central part of Dixie Valley, approximately 13.5 miles south-southwest of the CC project site. The project area is at an elevation of approximately 3,380 feet immediately east of the alluvial fans at the base of the Stillwater Range.

3.3 Supplemental Authorities and Other Resources

This chapter identifies and describes the current condition and trend of elements or resources in the human environmental which may be affected by the Proposed Action or Alternatives. Appendix 1 of BLM's NEPA Handbook (BLM, 2008) identifies resource

elements to consider under NEPA and their associated supplemental authorities that contain procedural requirements that BLM must consider as part of its Federal action. The elements are the various resources, such as air quality and biological resources, that could be affected by Federal actions. The supplemental authorities are specified by statutes or executive orders additional to NEPA, such as the Clean Water Act and the Endangered Species Act, that must be considered in all BLM environmental documents.

The BLM's specialists evaluated the potential applicability of the supplemental authorities and the potential impact of the Proposed Actions on the resource elements. On the basis of this evaluation, the BLM has determined the elements to be analyzed in detail in this EA. Table 10 summarizes the elements listed in Appendix 1 of the BLM's NEPA Handbook and documents the BLM's determination of which elements are relevant to the analysis in this EA. Each of the resource elements in Table 10 is described in this Affected Environment section and subsequently analyzed in Section 4.

The BLM also determined that resource elements not included in Appendix 1 of the NEPA Handbook be considered for inclusion in this EA. Table 11 presents those additional elements and documents the BLM's determination of which elements are relevant to the analysis in this EA.

TABLE 10
Supplemental Authorities

Elements[a]	Not Present[b]	Present/ Not Affected	Present/May Be Affected[c]	Addressed in Sections	Rationale
Air Quality			X	3.2, 4.1.1	
Areas of Critical Environmental Concern	X				
Cultural Resources			X	3.3, 4.1.2	
Environmental Justice	X				
Farm Lands (prime or unique)	X				
Forests and rangelands (Healthy Forests Restoration Area projects only)	X				
Human Health and Safety (herbicide projects)	X				
Floodplains			X	3.9, 4.1.8	
Invasive, Nonnative, and Noxious Species			X	3.6.2, 4.1.5	
Migratory Birds			X	3.6.3, 4.1.5	
Native American Religious Concerns			X	3.4, 4.1.3	

TABLE 10
Supplemental Authorities

Elements[a]	Not Present[b]	Present/ Not Affected	Present/May Be Affected[c]	Addressed in Sections	Rationale
Threatened and/or Endangered Species	X			3.6.4, 4.1.5	There are no federally listed threatened or endangered species in the lease areas.
Wastes, Hazardous or Solid			X	3.8, 4.1.7	
Water Quality (Surface/Ground)			X	3.9, 4.1.8	
Wetlands/Riparian Zones			X	3.9, 4.1.8	
Wild and Scenic Rivers	X				
Wilderness	X				

[a]See H-1790-1(January 2009) Appendix 1 *Supplemental Authorities to be Considered.*
[b]Supplemental Authorities determined to be Not Present or Present/Not Affected need not be carried forward or discussed further in the document.
[c]Supplemental Authorities determined to be Present/May Be Affected must be carried forward in the document.

TABLE 11
Other Resources

Resource or Issue	Present/ Not Affected[a]	Present/May Be Affected[b]	Addressed in Sections	Rationale
Visual Resource Management		X	3.12, 4.1.11	
Paleontology		X	3.5, 4.1.4	
Noise	X			No receptors are present in the vicinity of the project area.
Soil		X	3.11, 4.1.10	
Vegetation		X	3.6.1, 4.1.5	
Geology/Minerals		X	3.10, 4.1.9	
Livestock Grazing		X	3.7, 4.1.6	
Wildlife		X	3.6.5, 4.1.5	
Special-status Species BLM Sensitive		X	3.6.4, 4.1.5	
Lands		X	3.13, 4.1.12	

[a]Resources or uses determined to be Present/Not Affected need not be carried forward or discussed further in the document.
[b]Resources or uses determined to be Present/May Be Affected must be carried forward in the document.

The BLM also identified several specific issues relevant to the Proposed Actions that required discussion in this EA:

- A habitat assessment based on geographic information system (GIS) vegetation layers from the Southwest Regional Gap Analysis Project (SWReGAP) is required.
- Native American Tribal Consultation is a key component of the NEPA analysis.

3.4 Air Quality

The CC and DM project areas are located in a rural area with minimal industrial sources or potential contribution to emissions to the airshed from vehicle traffic. Activities associated with the Proposed Actions would occur in Groundwater Basin 128 in Churchill County, Nevada (Figure 5). Groundwater basins in the state of Nevada correspond to airsheds and, therefore, Groundwater Basin 128 is the analysis area for air quality. This basin is in attainment for all National Ambient Air Quality Standards (NAAQS) and Nevada air quality standards. In addition, the area is not a maintenance area for any criteria pollutants.

Regulatory Environment

The U.S. Environmental Protection Agency (EPA) Office of Air Quality Planning and Standards and NDEP have set NAAQS and Nevada ambient air quality standards for the following criteria pollutants: nitrogen dioxide, sulfur dioxide, carbon monoxide, particulate matter smaller than 10 microns in aerodynamic diameter (PM_{10}), particulate matter smaller than 2.5 microns in aerodynamic diameter ($PM_{2.5}$), ozone, and lead. In addition to the above-listed criteria pollutants, NDEP has established an ambient air quality standard of 0.08 parts per million (ppm) or 112 micrograms per cubic meter for hydrogen sulfide (H_2S). Nevada Administrative Code 445B.22097 provides the minimum standards of quality for Nevada ambient air.

Attainment is achieved when the existing background concentrations for criteria air pollutants are less than the maximum allowable ambient concentrations defined in the NAAQS. The attainment status, with respect to the NAAQS, of the airshed in which the Proposed Actions are located precludes the requirement for an air quality conformity analysis.

The Final Mandatory Reporting of Greenhouse Gases Rule issued by the EPA, as signed on September 22, 2009, requires suppliers of fossil fuels or industrial greenhouse gases (GHG), manufacturers of vehicles and engines, and facilities that emit 25,000 metric tons or more per year of GHG emissions to submit annual reports to the EPA.

The Nevada Division of Environmental Protection (NDEP) also requires GHG emissions reporting. However, NDEP has exempted geothermal projects from GHG reporting.

3.5 Cultural Resources

Cultural resources include historic and prehistoric sites of interest and may include structures, archaeological sites, or religious sites of importance to Native American cultures. Section 106 of the National Historic Preservation Act as amended (16 USC 40 *et seq.*) requires federal agencies to take into account the effects of their actions on properties listed or eligible for listing on the National Register of Historic Places (NRHP). The National Park

Service (NPS) defines archaeological and historic resources as "the physical evidences of past human activity, including evidences of the effects of that activity on the environment. What makes a cultural resource significant is its identity, age, location, and context in conjunction with its capacity to reveal information through the investigatory research designs, methods, and techniques used by archeologists." Ethnographic resources are defined as any "site, structure, object, landscape, or natural resource feature assigned traditional legendary, religious, subsistence, or other significance in the cultural system of a group traditionally associated with it" (NPS, 1998).

The basic cultural chronology of the western Great Basin includes the Pre-Archaic and Archaic Periods (Elston, 1986). A more thorough background of the prehistoric, historic, and ethnographic resources found in the area can be found in the inventory report conducted for this project (Young and Garner 2009). Below is a very brief summary of this 12,000 years of human occupation in western Nevada.

The Pre-Archaic period is defined by artifacts including Clovis and Folsom fluted lanceolate projectile points and Lake Mojave lanceolate projectile points. Reliance on big game hunting dominated the Pre-Archaic subsistence strategy. The main indicator of the shift to the Archaic period is a change to a broader strategy focused on hunting and gathering of resources. The projectile points became smaller and more suited for hunting smaller game, although they were still mounted on the ends of a dart or spear, and there was an increase in the number and type of stone grinding implements used for plant and seed processing. The material culture diversified greatly with the contemporaneous introduction of pottery and the bow and arrow with smaller projectile points. By around A.D. 1200, an expansion of Numic-speaking peoples into the area seems to have replaced or displaced the previous inhabitants (Bettinger and Baumhoff, 1982). Archaeologically, the primary material culture of the Numic includes Intermountain Brownware pottery and Desert Side Notched and Cottonwood Triangular arrow points. The subsistence strategy appears to have shifted back to a focus on hunting and gathering, although there is some evidence of at least limited reliance on horticulture. The Numic-speaking peoples, including the Northern Paiute, were the occupants of the Great Basin upon the initial arrival of Europeans and their influences.

Cultural resource investigations of the project areas for both CC and DM were conducted in July 2009 (Young and Garner, 2009). The investigations included Class I literature reviews of both State of Nevada and BLM field office files and Class III pedestrian inventories of the CC and DM project areas.

The Class I literature search reviewed files at both the BLM Carson City Field Office and the Nevada State Museum Annex in Carson City (Garner and Young, 2009), which included the project area and a one-mile buffer. The files indicate numerous small projects have been conducted in the past, mainly in support of geothermal exploration in Dixie Valley. Forty-seven previously recorded sites have been identified within the project area and a one-mile buffer. Most of these sites are small, simple lithic and ground stone scatters. Most of the prehistoric sites are generally located on the gentle alluvial fan on the west side of Dixie Valley. Historic resources previously documented include historic roads, homesteads, and a borax mine. All previously recorded sites within the project area were revisited during the cultural resource surveys conducted for this project (see below).

3.5.1 Coyote Canyon

The entire CC project area was surveyed for cultural resources, either by Far Western during the 2009 surveys for this project or by other recent investigations in the area for small geothermal exploration or testing projects (McGuire, 1993). Fifteen cultural resource sites have been identified in the project area, two of which were combined into one site based on the recommendations of the cultural resources study, resulting in a total of 14 cultural resource sites. Prehistoric sites dominate the assemblage; one historic site was identified during a previous investigation (McGuire 1993). The historic site consists of a small-scale mining venture with associated artifacts and was previously recommended as not eligible. The site was reexamined and updated during the current inventory and is recommended as not eligible to the NRHP..

Of the remaining 13 sites, nine are classified as a simple flaked stone assemblage, two as a complex flaked stone assemblage, one as a simple ground stone assemblage, and one as a complex ground stone assemblage. Six prehistoric sites (three previously identified and three identified during the current inventory) have been determined to be eligible for listing to the NRHP based upon the potential to yield data that would contribute to the understanding of the prehistoric occupation of the area. Seven prehistoric sites are not recommended eligible for listing on the NRHP. At this stage, all recommendations for site eligibility for listing on the NRHP are based on preliminary field recommendations and are subject to review and possible changes during BLM and State Historic Preservation Office (SHPO) consultations.

3.5.2 Dixie Meadows

The DM project area was surveyed for cultural resources in 2009, except for a small 288 acre portion that lies within the muddy playa floor of Dixie Valley. Two hundred eighty-eight acres of the Dixie Meadows Area of Potential Effect (APE) could not be inventoried at Class III intervals due to inclement conditions; this area is part of the seasonal pool area of the Dixie Valley open playa. Survey crews attempted to access the area but were repeatedly repelled by surface water and deep mud. Although the pool area shifts due to wind and other surface conditions, the survey area (and APE) has experienced consistent inundation/saturation for the past several years. The playa surface in this portion of Dixie Valley (also known as the Humboldt Salt Marsh) is subject to periodic sediment and mineral deposition during wet periods followed by scouring and redistribution in dry intervals. In the long-term this cyclical process results in a net erosional landform where the potential for buried Late Pleistocene and Holocene-age archaeological sites is negligible.

Six cultural resources have been identified within the DM project area. Two historic sites (one historic road with associated debris and one domestic dump with associated debris scatter) are recommended as not eligible to the NRHP. Four prehistoric sites were identified during the current inventory. Three of the prehistoric sites have been identified as not eligible and one was recommended as eligible for listing to the NRHP based upon the potential to yield data that would contribute to the understanding of the prehistoric occupation of the area.

3.6 Native American Religious Concerns

Consultation was initiated with the Fallon Paiute-Shoshone Tribe on July 6, 2009. Correspondence included a description of the proposed project, cultural resource inventory and a map. Subsequent correspondence provided the results of the cultural resource inventory and subsequent final report (October 27 and November 30, 2009). A face to face meeting was conducted between the BLM and tribal staff on January 12, 2010. A request for additional information was made and concerns have been documented for the Dixie Hot springs, located within the current Dixie Meadow project area. The location has been and continues to be used by tribal members for healing and ceremonial purposes (Bingston 2002). Consultation will be ongoing.

3.7 Paleontological Resources

An Initial Paleontological Resources Assessment for the CC and DM project areas was completed in August 2009 (CH2M HILL, 2009a). In it, the initial Potential Fossil Yield Classifications (PFYC) of the geological units affected by the Proposed Actions were determined following the guidance of BLM's Instructional Memorandum no 2008-009 (BLM, 2007c). Initial PFYC classifications were based on the results of literature searches and record reviews, as well as an analysis of remote imagery of the project areas. In the case of both the CC and DM project areas, there are sediments designated as possessing low paleontological sensitivity (PFYC = 2), and those possessing unknown sensitivity but which have yielded scientifically important fossils in other parts of the Great Basin (PFYC = 3b). These latter are sediments that were similar in character and geomorphic setting to those laid down on the margins of Pleistocene (Ice Age) lakes and at ancient springs, both of which are found in the DM and CC project areas. Satellite imagery was used to estimate the extent of these sediments, and then these findings were field checked during a paleontological resources survey.

A paleontological survey of the areas with a PFYC of 3b was completed in September 2009 to more specifically characterize their paleontological sensitivity. This field work included surveys of areas with the potential to yield fossil material, in-field determinations of "low" paleontological sensitivity based on (especially) topographic position and nature of the sediments (e.g., alluvium vs. lacustrine silt), and spot-checking areas with a PFYC of 2 to confirm their low paleontological sensitivity.

Fossil material was discovered in only one restricted part of the CC project area. In the case of most of the CC project area, however, field evidence justifies a downgrade of areas with an initial PFYC of 3b (unknown) to a PFYC of 2 (low). Areas identified in remote imagery as paleospring deposits based on their albedo and hue were found to actually be salt-encrusted playa surface. Playa sediment normally possesses low paleontological sensitivity near the surface because bone and other organic debris are not only quickly oxidized, but also mechanically degraded by the seasonal dissolution and recrystalization of salts in these soil environments. In the DM project area, however, survey evidence supports retention of a PFYC Class 3b (unknown with possible potential at depth).

The location of remaining areas where sediments possess sensitivity is confidential resource information and maps showing these areas are documented separately with the BLM.

3.7.1 Coyote Canyon

Alluvium seldom yields fossils and therefore the alluvial fan sediments that comprise most of the surfaces of Sections 12, 13, 14, 15, 21, and 22 (T24N,R36E) were given a "low" PFYC of 2. Portions of Sections 13, 14, 15, 21, 22, 23, and 24 that were assigned an initial PFYC of 3b (unknown) were subsequently subject to survey and field review. The subsequent field review and survey established the low paleontological potential (PFYC = 2) of all these areas except portions of Sections 14 and 15.

In portions of Sections 14 and 15 subfossil wood consisting primarily of the logs of pinyon (*Pinus monophylla*) and Utah juniper (*Juniperus osteosperma*) were found on the alluvial fans of two of the larger canyons issuing from the Stillwater Range. Similar wood material was observed outside of the project area on the surface on the Cottonwood Canyon alluvial fan several miles to the northeast. Woodland currently lies several miles into the Stillwater Range and more than 1,500 feet higher in elevation. Unlike conventional paleontological material, subfossil wood is simply "mummified" in the dry climate, and its scientific potential lies in its dendrochronological, paleoecological and surface-age dating potential. Therefore, the portions of Sections 14 and 15 where subfossil wood was found were assigned a PFYC Class 4 (high potential).

3.7.2 Dixie Meadows

In contrast to the CC project area where the principal set of fault scarps is at the foot of the mountain, the DM project area is host to a series of fault scarps and footwall remnants immediately adjacent to the Holocene playa and presently active spring systems. These geomorphic remnants of past seismic events along the DM Fault System (Blackwell et al., 2007), as well as the active springs of Dixie Meadows itself, provided a more varied lake-margin environment during high lake stands than a geomorphically simple shoreline. Eroded footwall remnants are linear, subparallel, discontinuous ridges cored with very poorly sorted, angular alluvium. They are not constructional beach ridges; their composition, up to and including boulders approaching a meter in diameter, clearly shows that they are alluvial fan remnants; presumably upthrust footwall remnants of prior fault-induced ruptures. The lacustrine sediment deposited along the shore of Paleolake Dixie have accumulated to some depth behind these footwall remnants.

In addition to deposits of relative deep lacustrine sediment there are also extensive spring discharge areas and associated wet meadows, mashes and pools in the Dixie Meadows project area. In other parts of the Great Basin spring discharge environments have provided important sites for the preservation of the fossils of extinct late Pleistocene mammals. No Pleistocene fossils were found in the vicinity during the survey, but few exposures of sediment were located and hence such fossils could still occur at depth. Therefore, areas with extensive spring systems, as well as those with potentially deep lacustrine silt deposits, were assigned a PFYC Class of 3b (unknown, but with possible potential at depth). These occur in limited portions of Sections 4, 5, 8, 9, 17, 18, 19, and 20 (T22N, R35W). These four sections therefore have exposed paleontologically sensitive sediment.

3.8 Biological Resources

Biological surveys, including a habitat assessment and general wildlife explorations, of the CC and DM lease areas, were conducted on June 29, 30, and July 1, 2009 (CH2M HILL,

2009b). An additional assessment of vegetation in portions of the project areas was conducted August 24 to 27, 2009. Southwest Regional Gap Analysis Project (SWReGAP) landcover data were supplemented and updated with field explorations and reference to *Intermountain Flora, Volume 1* (U.S. Geological Survey [USGS], 2004; Cronquist et al., 1972).

3.8.1 Vegetation

The vegetation within this semi-arid area is controlled greatly by elevation, substrate, aspect, and landform. Alluvial fan surfaces above 3,430 feet above sea level and below the mountain front support the intermountain basins mixed salt desert scrub community, with the exception of dry wash channels, which contain intermountain basins greasewood flats. The area between 3,430 feet above sea level and the edge of the intermountain basin playa community (generally 3,390 to 3,400 feet above sea level) is composed of a mosaic of halophytic (salt-tolerant) and hydrophytic (wetland) plant communities. The halophytic communities include intermountain basins greasewood flats, saltgrass (*Distichlis spicata* var. *stricta*) meadows, and iodinebush (*Allenrolfea occidentalis*) scrub. The hydrophytic communities are primarily marshes typified by cattail (*Typha latifolia*), rush (*Juncus* spp. and *Scirpus* spp.), and common reed (*Phragmites australis)* among other species. The playa is largely barren of vegetation.

The intermountain basins mixed salt desert scrub community is characterized by open shrubland dominated by shadscale (*Atriplex confertifolia*) with scattered bush seepweed (*Suaeda moquinii),* yellow rabbitbrush (*Chrysothamnus viscidiflorus*), Nevada jointfir (*Ephedra nevadensis*), spiny hopsage (*Grayia spinosa*), budsage (*Artemisia spinescens*), broom snakeweed (*Gutierrezia sarothrae*), winterfat (*Krascheninnikovia lanata*), Indian ricegrass (*Achnatherum hymenoides*), and cheatgrass (*Bromus tectorum*). Despite its apparent diversity there is much barren ground between the shrubs, and there is little grass cover. Cheesebush (*Hymenoclea salsola*) and desert trumpet (*Eriogonum inflatum* var. *deflatum*) were found occupying disturbed areas.

The intermountain basins greasewood flats community is dominated by greasewood (*Sarcobatus vermiculatus*) and contains sparsely scattered Torrey's saltbush (*Atriplex torreyi*), yellow rabbitbrush, saltlover (*Halogeton glomeratus*), budsage, and bush seepweed. Bare ground is common and the substrate usually possesses the poorly developed soils of wash-bottoms. Again there are few perennial grasses.

At the fringe of the playa, where the salt concentration appears too great for greasewood, more salt-tolerant communities such as saltgrass meadow and iodinebush scrub are found. Marshes are found at springs, seeps, and around open water in both the CC and DM project areas. These palustrine emergent wetlands are surrounded by desert vegetation or playa. The marsh vegetation is adapted to saturated soil conditions and includes species of rush, knotweed (*Polygonum* spp.), canarygrass (*Phalaris* spp.), spikerush (*Eleocharis* spp.), duckweed (*Lemna* sp.), as well as common reed and cattail. Riparian trees and shrubs are not common and are restricted to isolated stands of willow (*Salix* sp.), wild rose (*Rosa woodsii*), Russian olive (*Eleaegnus angustifolia*), and saltcedar (*Tamarix ramosissima*), the latter two being introduced species, invasive in many hydric habitats.

3.8.1.1 Coyote Canyon

Just fewer than half the potential well pads in the CC project area and their associated access routes are located in intermountain basins mixed salt desert scrub community. Most of the remainder of the potential well pads and their access routes are located in salt-tolerant communities (e.g., intermountain basins greasewood flats, saltgrass meadow, and iodinebush scrub). A minority of the potential well pads are located within the intermountain basin playa community, some of which may be in the vicinity of marsh vegetation associated with seeps and springs, based on analysis of aerial photographs. Wetland vegetation is discussed further in Section 3.9.

3.8.1.2 Dixie Meadows

The majority of the well pads and access routes in the DM project area are located in salt-tolerant communities. A minority of the well pads are located within the intermountain basin playa community. Using aerial photography, two of the well pads (28-4 and 32-9) appear to be in the vicinity of marsh vegetation. One of the proposed access roads passes through intermountain basins mixed salt desert scrub.

3.8.2 Invasive, Non-native, and Noxious Species

The State of Nevada lists 47 noxious weed species that require control (Nevada Administrative Code 555.10; Nevada Department of Agriculture, 2008). Of these, saltcedar (*Tamarix ramosissima*) was the only noxious weed identified in the project areas during field surveys. In addition, the following invasive, non-native species were identified within or in the vicinity of the project areas: Russian olive (*Elaeagnus angustifolia*), cheat grass (*Bromus tectorum*), Russian thistle (*Salsola kali*), and common sowthistle (*Sonchus oleraceus*).

3.8.3 Migratory Birds

On January 11, 2001, President Clinton signed Executive Order 13186 (Land Bird Strategic Project) placing emphasis on conservation and management of migratory birds. The species are not protected under the Endangered Species Act, but most are protected under the Migratory Bird Treaty Act of 1918. Management for these species is based on Instruction Memorandum - IM 2008-050 dated December 18, 2007 (BLM, 2007b). Migratory birds with potential to use the project areas, such as black-throated sparrow (*Amphispiza bilineata*), horned lark (*Eremophila alpestris*), and common raven (*Corvus corax*), are species associated with intermountain basins mixed salt desert scrub, salt-tolerant communities, marsh, and playa habitats.

3.8.3.1 Coyote Canyon

Table 12 below lists migratory birds potentially present in CC.

TABLE 12
Migratory Bird Species of Concern, Habitat Association, and Presence/Absence of Suitable Habitat in Coyote Canyon

Common Name	Scientific Name	Habitat Association	Presence/ Absence of Suitable Habitat
Game Birds of Conservation Concern			
Canvasback	*Aythya valisineria*	Marshes, ponds, lakes, rivers and bays.	May be present

TABLE 12
Migratory Bird Species of Concern, Habitat Association, and Presence/Absence of Suitable Habitat in Coyote Canyon

Common Name	Scientific Name	Habitat Association	Presence/ Absence of Suitable Habitat
Dove, Mourning	*Zenaida macroura*	Open woodland, forest edge, cultivated lands with scattered trees and bushes, parks and suburban areas, arid and desert county and second growth.	Present
Duck, Ring-necked	*Aythya collaris*	Marshes, lakes, rivers, swamps, especially in wooded areas.	May be present
Duck, Wood	*Aix sponsa*	Quiet inland waters near woodland, such as wooded swamps, flooded forest, greentree reservoirs, ponds, marshes and along streams.	May be present
Mallard	*Anas platyrhynchos*	Primarily shallow waters such as ponds, lakes, marshes, and flooded fields.	May be present
Pintail, Northern	*Anas acuta*	Lakes, rivers, marshes and ponds in grasslands, barrens, dry tundra, open boreal forest or cultivated fields.	May be present
Bird Species of Conservation Concern			
Avocet, American	*Recurvirostra americana*	Lowland marshes, mudflats, ponds, alkaline lakes, and estuaries.	May be present
Bittern, American	*Botaurus lentiginosus*	Primarily large freshwater and brackish marshes, including lakes and pond edges where cattails, sedges, or bulrushes are plentiful and marshes where there are patches of open water and aquatic-bed vegetation.	May be present
Curlew, Long-billed	*Numenius americanus*	Short-grass grasslands and sometimes wheatfields or fallow fields; nests usually close to standing water	May be present
Eagle, Golden	*Aquila chrysaetos*	Generally open country, in prairies, arctic and alpine tundra, open wooded country, and barren areas, especially in hilly or mountainous regions.	Present; observed at existing Dixie Valley geothermal facility
Falcon, Prairie	*Falco mexicanus*	Primarily open situations, especially in mountainous areas, steppe, plains or prairies.	Present; observed in Coyote Canyon
Harrier, Northern	*Circus cyaneus*	Marshes, meadows, grasslands, and cultivated fields.	May be present
Hawk, Ferruginous	*Buteo regalis*	Grasslands and semidesert shrublands; nest in isolated trees, on rock outcrops, or ground	Present
Hummingbird,	*Calypte costae*	Desert, shrubland/chaparral	Present

TABLE 12
Migratory Bird Species of Concern, Habitat Association, and Presence/Absence of Suitable Habitat in Coyote Canyon

Common Name	Scientific Name	Habitat Association	Presence/ Absence of Suitable Habitat
Costa's			
Owl, Burrowing	*Athene cunicularia*	Open dry shrub/steppe grasslands, agricultural and rangelands, and desert habitats associated with burrowing animals.	Present
Phalarope, Wilson's	*Phalaropus tricolor*	Shallow freshwater and saline ponds, marshes and wet meadows. Uses both fresh and alkali wetlands with open water, emergent vegetation, and open shoreline.	May be present
Plover, Snowy	*Charadrius alexandrinus*	Beaches, dry mud or salt flats, sandy shores of rivers, lakes and ponds.	May be present
Shrike, Loggerhead	*Lanius ludovicianus*	Open county with scattered trees and shrubs, savanna, desert scrub, and occasionally open woodland.	Present; observed in lease area
Sparrow, Brewer's	*Spizella breweri*	Strongly associated with sagebrush over most of range, in areas with scattered shrubs and short grass.	Present
Sparrow, Sage	*Amphispiza belli*	Strongly associated with sagebrush for breeding; also found in saltbush brushland, shadscale, antelope brush, rabbitbrush, black greasewood, mesquite, and chaparral.	Present
Vireo, Gray	*Vireo vicinior*	Inhabits hot, semi-arid, shrubby habitats.	Present
Willet	*Tringa semipalmata*	Marshes, tidal mudflats, beaches, lake margins, mangroves, tidal channels, river mouths, coastal lagoons, sandy or rocky shores, less frequently open grassland.	May be present

3.8.3.2 Dixie Meadows

Table 13 below lists migratory birds potentially present in DM.

TABLE 13
Migratory Bird Species of Concern, Habitat Association, and Presence/Absence of Suitable Habitat in Dixie Meadows

Common Name	Scientific Name	Habitat Association	Presence/ Absence of Suitable Habitat
Game Birds of Conservation Concern			
Canvasback	*Aythya valisineria*	Marshes, ponds, lakes, rivers and bays.	Present
Dove, Mourning	*Zenaida macroura*	Open woodland, forest edge,	Present

TABLE 13
Migratory Bird Species of Concern, Habitat Association, and Presence/Absence of Suitable Habitat in Dixie Meadows

Common Name	Scientific Name	Habitat Association	Presence/ Absence of Suitable Habitat
		cultivated lands with scattered trees and bushes, parks and suburban areas, arid and desert county and second growth.	
Duck, Ring-necked	*Aythya collaris*	Marshes, lakes, rivers, swamps, especially in wooded areas.	Present
Duck, Wood	*Aix sponsa*	Quiet inland waters near woodland, such as wooded swamps, flooded forest, greentree reservoirs, ponds, marshes and along streams.	Present
Mallard	*Anas platyrhynchos*	Primarily shallow waters such as ponds, lakes, marshes, and flooded fields.	Present; observed in Dixie Meadows
Pintail, Northern	*Anas acuta*	Lakes, rivers, marshes and ponds in grasslands, barrens, dry tundra, open boreal forest or cultivated fields.	Present
Bird Species of Conservation Concern			
Avocet, American	*Recurvirostra americana*	Lowland marshes, mudflats, ponds, alkaline lakes, and estuaries.	Present
Bittern, American	*Botaurus lentiginosus*	Primarily large freshwater and brackish marshes, including lakes and pond edges where cattails, sedges, or bulrushes are plentiful and marshes where there are patches of open water and aquatic-bed vegetation.	Present
Curlew, Long-billed	*Numenius americanus*	Short-grass grasslands and sometimes wheatfields or fallow fields; nests usually close to standing water	May be present
Eagle, Golden	*Aquila chrysaetos*	Generally open country, in prairies, arctic and alpine tundra, open wooded country, and barren areas, especially in hilly or mountainous regions.	Present; observed at existing Dixie Valley geothermal facility
Falcon, Prairie	*Falco mexicanus*	Primarily open situations, especially in mountainous areas, steppe, plains or prairies.	Present
Harrier, Northern	*Circus cyaneus*	Marshes, meadows, grasslands, and cultivated fields.	Present; observed in Dixie Meadows
Hawk, Ferruginous	*Buteo regalis*	Grasslands and semidesert shrublands; nest in isolated trees, on rock outcrops, or ground	Present
Hummingbird, Costa's	*Calypte costae*	Desert, shrubland/chaparral	Present

TABLE 13
Migratory Bird Species of Concern, Habitat Association, and Presence/Absence of Suitable Habitat in Dixie Meadows

Common Name	Scientific Name	Habitat Association	Presence/ Absence of Suitable Habitat
Owl, Burrowing	*Athene cunicularia*	Open dry shrub/steppe grasslands, agricultural and rangelands, and desert habitats associated with burrowing animals.	Present
Phalarope, Wilson's	*Phalaropus tricolor*	Shallow freshwater and saline ponds, marshes and wet meadows. Uses both fresh and alkali wetlands with open water, emergent vegetation, and open shoreline.	Present
Plover, Snowy	*Charadrius alexandrinus*	Beaches, dry mud or salt flats, sandy shores of rivers, lakes and ponds.	Present
Shrike, Loggerhead	*Lanius ludovicianus*	Open county with scattered trees and shrubs, savanna, desert scrub, and occasionally open woodland.	Present; observed in lease area
Sparrow, Brewer's	*Spizella breweri*	Strongly associated with sagebrush over most of range, in areas with scattered shrubs and short grass.	Present
Sparrow, Sage	*Amphispiza belli*	Strongly associated with sagebrush for breeding; also found in saltbush brushland, shadscale, antelope brush, rabbitbrush, black greasewood, mesquite, and chaparral.	Present
Vireo, Gray	*Vireo vicinior*	Inhabits hot, semi-arid, shrubby habitats.	Present
Willet	*Tringa semipalmata*	Marshes, tidal mudflats, beaches, lake margins, mangroves, tidal channels, river mouths, coastal lagoons, sandy or rocky shores, less frequently open grassland.	Present

3.8.4 Special-status Species

3.8.4.1 Threatened and Endangered Species

BLM Manual 6840 - Special Status Species Management, establishes policy for management of species listed or proposed for listing pursuant to the Endangered Species Act that are found on BLM-administered lands (BLM, 2008c).

Pursuant to the requirements of Section 7(c) of the Endangered Species Act, for federal agencies to consult with the U.S. Fish and Wildlife Service (USFWS) concerning listed species, separate letters were sent to USFWS on July 15, 2009, requesting information regarding threatened and endangered species that may occur in the CC and DM project areas. USFWS responded in separate letters dated August 26, 2009, that to the best of its

knowledge no listed, proposed, or candidate threatened and endangered species exist in the CC or DM project areas.

3.8.4.2 BLM Sensitive Species

BLM Manual 6840 - Special Status Species Management, establishes policy for management of BLM sensitive species that are found on BLM-administered lands (BLM, 2008c). Species designated as BLM sensitive must be native species found on BLM-administered lands for which the BLM has the capability to significantly affect the conservation status of the species through management, and either:

1. There is information that a species has recently undergone, is undergoing, or is predicted to undergo a downward trend such that the viability of the species or a distinct population segment of the species is at risk across all or a significant portion of the species range, or
2. The species depends on ecological refugia or specialized or unique habitats on BLM-administered lands, and there is evidence that such areas are threatened with alteration such that the continued viability of the species in that area would be at risk.

BLM mapping confirmed (USGS, 2008) and field surveys verified that no greater sage grouse (*Centrocercus urophasianus*) habitat is present within the lease boundary. However, sage grouse may use water sources in desert scrub habitat that is relatively near sagebrush habitat (Wilson, 2009). Table 14 presents BLM sensitive species, their habitat association, and presence/absence of habitat in the project areas.

TABLE 14
Nevada BLM Sensitive Species, Habitat Association, and Presence/Absence of Suitable Habitat in Project Areas

Common Name	Scientific Name	Habitat Association	Presence/Absence of Suitable Habitat
Northern leopard frog	*Rana pipiens*	Springs, slow streams, marshes, bogs, ponds, canals, floodplains, reservoirs, and lakes; usually permanent water with rooted aquatic vegetation	Present
Golden eagle	*Aquila chrysaetos*	Generally open country, in prairies, arctic and alpine tundra, open wooded country, and barren areas, especially in hilly or mountainous regions	Present; observed at existing Dixie Valley geothermal facility
Ferruginous hawk	*Buteo regalis*	Grasslands and semidesert shrublands; nest in isolated trees, on rock outcrops, or ground	Present
Prairie falcon	*Falco mexicanus*	Primarily open situations, especially in mountainous areas, steppe, plains or prairies.	Present; observed in Coyote Canyon
Burrowing owl	*Athene cunicularia*	Open dry shrub/steppe grasslands, agricultural and rangelands, and desert habitats associated with burrowing animals	Present
Loggerhead shrike	*Lanius ludovicianus*	Open county with scattered trees and shrubs, savanna, desert scrub, and occasionally open woodland.	Present; observed in lease area
Vesper sparrow	*Pooecetes gamineus*	Plains, prairie, dry shrublands, savanna, weedy pastures, fields, sagebrush, arid scrub and woodland clearings	Present
Gray vireo	*Vireo vicinior*	Inhabits hot, semi-arid, shrubby habitats	Present
Sandhill crane	*Grus canadensis*	Open grasslands, marshes, marshy edges of lakes and ponds, river banks	Present; migrant
Snowy plover	*Charadrius alexandrinus*	Beaches, dry mud or salt flats, sandy shores of rivers, lakes and ponds	Present
Black tern	*Chlidonias niger*	Marshes, along sloughs, rivers, lakeshores, and impoundments, or in wet meadows, typically in sites with mixture of emergent vegetation and open water	Present; migrant
Long-billed curlew	*Numenius americanus*	Prairies and grassy meadows, generally near water	May be present

TABLE 14
Nevada BLM Sensitive Species, Habitat Association, and Presence/Absence of Suitable Habitat in Project Areas

Common Name	Scientific Name	Habitat Association	Presence/Absence of Suitable Habitat
Least bittern	*Ixobrychus exilis*	Tall emergent vegetation in marshes, primarily freshwater, less commonly in coastal brackish marshes and mangrove swamps	Present
Western pipistrelle bat	*Pipistrellus hesperus*	Deserts and lowlands, desert mountain ranges, desert scrub flats, and rocky canyons	Present
Pallid bat	*Antrozous pallidus*	Arid deserts and grasslands, often near rocky outcrops and water	Present
Spotted bat	*Euderma maculatum*	Found in various habitats from desert to montane coniferous stands, including open ponderosa pine, pinyon-juniper woodland, canyon bottoms, open pastures, and hayfields	Present
Silver-haired bat	*Lasionycteris noctivagans*	Prefers forested (frequently coniferous) areas adjacent to lakes, ponds, and streams	May forage in lease area
Townsend's big-eared bat	*Corynorhinus townsendii*	Maternity and hibernation colonies typically are in caves and mine tunnels	May forage in lease area
Big brown bat	*Eptesicus fuscus*	Various wooded and semi-open habitats, including cities	Present
Hoary bat	*Lasiurus cinereus*	Prefers deciduous and coniferous forests and woodlands.	May forage in lease area
Brazillian free-tailed bat	*Tadarida braziliensis*	Roosts primarily in caves	May forage in lease area
Long-eared myotis	*Myotis evotis*	Mostly forested areas, especially those with broken rock outcrops; also shrubland, over meadows near tall timber, along wooded streams, over reservoirs	May forage in lease area
Fringed myotis	*Myotis thysanodes*	Primarily at middle elevations for 1,200-2,150 meters in desert, grassland, and wooded habitats	Present
California myotis	*Myotis californicus*	Western lowlands; sea coast to desert, oak-juniper, canyons, riparian woodlands, desert scrub, and grasslands	Present

TABLE 14
Nevada BLM Sensitive Species, Habitat Association, and Presence/Absence of Suitable Habitat in Project Areas

Common Name	Scientific Name	Habitat Association	Presence/Absence of Suitable Habitat
Small-footed myotis	*Myotis ciliolabrum*	Generally inhabits desert, badland, and semiarid habitats	Present
Little brown myotis	*Myotis lucifugus*	Adapted to using human-made structures for resting and maternity sites, also uses caves and hollow trees; foraging habitat is generalized, usually in woodlands near water	May forage in lease area
Long-legged myotis	*Myotis volans*	Primarily in montane coniferous forests; also riparian and desert habitats	May forage in lease area
Desert bighorn sheep	*Ovis canadensis nelsoni*	Steep slopes on or near mountains with a clear view of surrounding area	Present in Stillwater Range western portion of project area
Pallid wood nymph	*Cercyonis oetus pallescens*	Alkaline flats	Present
Sand Mountain blue	*Euphilotes pallescens arenamontana*	No data	Present; known to occur within Dixie Valley
Nevada dune beardtongue	*Penstemon arenarius*	Deep, volcanic, sandy soils at 1,200-1,350 meter elevation; common associates include fourwing saltbush, littleleaf horsebrush, and greasewood	Potentially present; not known to occur in Dixie Valley
Lahontan beardtongue	*Penstemon palmeri* var. *macranthus*	Along washes, roadsides, and canyon floors, particularly on carbonate-containing substrates, usually where subsurface moisture is available throughout most of the summer; unknown if restricted to calcareous substrates	Present; known to occur within Dixie Valley

3.8.5 Wildlife Resources

Wildlife found in the project areas is typical of Great Basin deserts. Wildlife species observed in the area during biological surveys included various bird species, coyote (*Canis latrans*), black-tailed jackrabbit (*Lepus californicus*), cottontail (*Sylvilagus* spp.), white-tailed antelope squirrel (*Ammospermophilus leucurus*), horned lizard (*Phyrnosoma platyrhinos*), zebra-tailed lizard (*Callisaurus draconoides*), western whiptail (*Aspidoscelis tigris*), side-blotched lizard (*Uta stansburiana*), and long-nosed leopard lizard (*Gambelia wislizenii*). Bat habitat is found in mines, caves, and rock crevices of the Stillwater Range.

Marsh and open water habitats are found in and around the CC and DM project areas. Herons, egrets, bitterns, ducks, geese, and other birds associated with open water and wetland habitats occur in these areas. The marsh areas also provide habitat for amphibian species.

3.9 Livestock Grazing

BLM manages rangelands on public lands under 43 CFR Part 4100 and BLM Handbooks 4100 to 4180. BLM conducts grazing management practices in accordance with BLM Manual H-4120-1 (BLM, 1984).

Under this management, ranchers may obtain a grazing permit for an allotment of public land on which a specified number of livestock may graze. An allotment is an area of land designated and managed for livestock grazing. The number of permitted livestock on a particular allotment on public land is determined by how many animal unit months (AUMs) that land would support. An AUM is the amount of forage needed to sustain one mature cow, five sheep, or five goats for 1 month (BLM, 2008b).

3.9.1 Coyote Canyon

The CC lease area lies within the Boyer Ranch Allotment, which comprises approximately 127,194 acres and 1,789 AUMs of currently authorized grazing capacity. Within this allotment, one AUM is equal to approximately 71 acres.

The grazing allotments within the project areas consist entirely of public lands administered by the BLM Carson City Office. Table 15 displays land ownership in the Boyer Ranch Allotment (BLM, 2009b).

TABLE 15
Livestock Permit Information—Coyote Canyon

Permit	Number of Livestock	On Date	Off Date	Animal Unit Months
Boyer Ranch Allotment				
A	179 cows	5/1	6/30	359
B	179 cows	10/1	2/28	889
C	179 sheep	7/1	9/30	541

3.9.2 Dixie Meadows

Portions of the DM lease area are located across three grazing allotments: Cow Canyon, Boyer Ranch, and Dixie Valley (BLM, 2009b). The Cow Canyon Allotment comprises 146,179 acres and 2,390 AUMs of currently authorized annual grazing capacity (BLM, 2009b). Within this allotment, one AUM is equal to approximately 61 acres. The Dixie Valley Allotment comprises 282,801 acres and 6,341 AUMs of currently authorized grazing capacity. Within this allotment, one AUM is equal to approximately 44 acres. The Boyer Ranch Allotment comprises approximately 127,194 acres and 1,790 AUMs of currently authorized grazing capacity. Within this allotment, one AUM is equal to approximately 71 acres.

The grazing allotments within the project areas consist entirely of public lands administered by the BLM Carson City Office. Table 16 displays land ownership in each allotment (BLM, 2009b).

TABLE 16
Livestock Permit Information—Dixie Meadows

Permit	Number of Livestock	On Date	Off Date	Animal Unit Months
Boyer Ranch Allotment				
A	179 cows	5/1	6/30	359
B	179 cows	10/1	2/28	889
C	179 sheep	7/1	9/30	541
Total				**1,789**
Cow Canyon Allotment				
A	365 cows	5/1	11/15	2,388
Total				**2,388**
Dixie Valley Allotment				
A	528 cows	3/1	2/28	6,336
B	5 cows	3/1	3/31	5
Total				**6,341**

3.10 Wastes, Hazardous or Solid

There are no known hazardous wastes or hazardous materials known to occur in the project area. Numerous federal and state laws and regulations have been enacted including the Resource Conservation and Recovery Act (RCRA) and Nevada Revised Statute 459.400 and are enforced by the Nevada Division of Environmental Protection (NDEP) Bureau of Waste Management to ensure that hazardous materials, hazardous waste and solid wastes are properly handled, stored, and disposed of.

3.11 Water Quality, Wetlands, and Floodplains

Groundwater

The CC and DM lease areas are located in the internally drained Dixie Valley groundwater basin (NDWR-designated Administration Groundwater Basin 128, Figure 5). Dixie Valley is

located in Nevada Hydrographic Region 10 (Central Region) (NDCNR-DWR, 2005), and is in the Great Basin hydrographic area. By Order 715, dated June 8, 1978, the Nevada State Engineer has "designated" the Dixie Valley groundwater basin, which indicates that the permitted groundwater rights approach or exceed the estimated average annual recharge and the water resources are being depleted or require additional administration (NDCNR-DWR, 2009).

Groundwater Basin 128 has an area of 1,303 square miles and a perennial yield of 15,000 acre-feet per year (AFY). The basin has committed underground water rights of 18,076 AFY and geothermal water rights of 13,428 AFY (NDCNR-DWR, 2009). Groundwater occurs in alluvial basin fill sediments and in underlying bedrock. In the northern portion of Dixie Valley, where the project areas are located, groundwater moves south through the valley, east from the Stillwater Mountains, and west from the Clan Alpine Mountains. Recharge to groundwater occurs from precipitation, primarily snowmelt, at higher elevations in the Stillwater Range and Clan Alpine Range west and east of Dixie Valley and in the alluvial fans and landslide deposits at the base of these mountains. The Humboldt Salt Marsh (playa) is the ultimate groundwater sink for Dixie Valley and six subbasins that are adjacent to Dixie Valley (Fairview, Pleasant, Jersey, Eastgate, Cowkick, and Stingaree valleys). Groundwater moves radially from the surrounding mountains and converges on the playa, where it discharges. Vertically, groundwater moves upward in the central part of the valley in response to hydraulic gradients, where it discharges to the playa and is lost to evaporation and transpiration.

Groundwater occurs in two separate but related aquifers in Dixie Valley: a shallow, non-thermal, alluvial aquifer and a deep, thermal, bedrock aquifer (Karst, 1987). Groundwater in the alluvium occurs under unconfined and confined conditions; however, hydraulic heads are typically beneath the elevation of the valley floor. Thermal groundwater is confined and generally occurs in fractured, zones within the bedrock underlying the alluvial basin fill sediments. Deep thermal groundwater and shallower alluvial groundwater are separated by a confining sequence thousands of feet thick, composed of shale, siltstone, volcaniclastic rocks, and a complex of intrusive and extrusive igneous rocks that includes gabbro, diorite, and basalt (Bruton et al., 1997). Fumaroles, hot springs, and warm springs along the west edge of Dixie Valley near the base of the Stillwater Range are believed to originate from deep geothermal water moving up a zone of locally enhanced permeability caused by the DM fault system (Smith et al., 2001). Chloride isotope analysis and a geochemical mixing evaluation reported by Bruton et al. (1997) indicates that shallow groundwater in Dixie Valley contains approximately 15 percent geothermal water, likely from fumaroles and hot springs in the area. As a groundwater discharge area, the depth to groundwater is anticipated to be shallow throughout much of northern Dixie Valley and would be expected to be shallowest close to the Humboldt Salt Marsh.

The total dissolved solids (TDS) concentration in shallow alluvial groundwater in Dixie Valley ranges from 900 to 1,900 milligrams per liter (mg/L) according to data tabulated by Karst (1987). Thermal groundwater in the area generally has higher dissolved solids content; however, the maximum TDS value reported by Karst was 1,920 mg/L, essentially the same as the maximum non-thermal groundwater concentration of 1,900 mg/L (Karst, 1987).

Surface Water

Based on analysis of USGS topographic maps and NDWR groundwater basin mapping (Figure 5), the Proposed Actions would be located in an internally drained desert basin that is a great distance from and lacks hydrographic connectivity to major rivers and water bodies. Therefore, there are no navigable waters of the United States within Rivers and Harbors Act jurisdiction (as defined by 33 CFR part 329) and no waters of the United States within Clean Water Act jurisdiction (as defined by 33 CFR 328) in the CC or DM project areas. A letter asking for an approved jurisdictional determination concurring with this finding was sent to the U.S. Army Corps of Engineers on July 13, 2009. A response is pending.

3.11.1 Coyote Canyon

The geothermal reservoir to be explored in CC is at an expected depth of up to 10,000 feet.

The USGS 7.5-minute topographic map of the area (Bolivia, Nevada Quadrangle 1990) shows ephemeral washes flowing southeast across the alluvial fan and valley bottom within the CC lease area and into the Humboldt Salt Marsh within Dixie Valley (Figure 6). These ephemeral washes only flow from significant rainfall or snowmelt events and those observed during field visits were dry. There are no Federal Emergency Management Agency (FEMA) Flood Insurance Program Mapping (FIRM) special flood hazard areas (SFHAs) or floodway areas within the CC project area (FEMA, 2008a). USGS mapping shows three seeps in Section 23 and one seep in Section 24 (Figure 6). There is a spring on the southern border of the lease area, on the border of Sections 22 and 27. There are numerous seeps and springs mapped directly south of the lease area. There are no National Wetland Inventory (NWI) mapped wetlands within the CC lease area (USFWS, 2008); however, palustrine emergent wetlands associated with seeps in Sections 23 and 24 were observed during field visits. These seeps and wetlands are shown on Figure 6.

3.11.2 Dixie Meadows

The geothermal reservoirs to be explored in DM are at expected depths of between 6,000 feet and 10,000 feet.

The USGS 7.5-minute topographic map of the area (Dixie Hot Springs, Nevada Quadrangle 1990) shows ephemeral washes flowing across the valley bottom within the DM lease area and into the Humboldt Salt Marsh (Figure 7). These ephemeral washes only flow from significant rainfall or snowmelt events and those observed during field visits were dry. Sections 10, 15, and 16 in the DM lease area lie within a FEMA FIRM Zone A "SFHA subject to inundation by the 1% annual chance flood" (FEMA, 2008b; Figure 7). USGS mapping shows numerous seeps, springs, and/or wetland areas in Sections 4, 5, 8, 9, 17, 18, and 19 (Figure 8). NWI mapping shows palustrine emergent wetlands associated with DM within Sections 5, 8, 9, and 17 in the DM lease area (USFWS, 2008; Figure 7). These wetlands were observed during field visits and additional wetlands were observed in Sections 4 and 19, associated with USGS mapped seeps (Figure 8).

3.12 Geology and Minerals

3.12.1 Coyote Canyon

The non-mountainous portions of the CC lease area, where wells would be installed as part of the Proposed Actions, is located at elevations ranging from approximately 3,400 feet to 3,600 feet in the northern part of Dixie Valley. Dixie Valley is a north-northeast/south-southwest-trending elongated valley in west-central Nevada, within the Great Basin Section of the Basin and Range Physiographic Province. The western edge of Dixie Valley is defined by the Stillwater Range and the eastern edge is defined by the Clan Alpine Mountains. Alluvial fans and pediment surfaces flank the area between the mountains and the valley interior. The proposed project is located on alluvial fans at the base of the Stillwater Range on the western edge of Dixie Valley.

Paleozoic marine carbonate rocks and clastic sedimentary rocks crop out in the Clan Alpine Mountains; however, these rocks have not been penetrated by wells drilled within Dixie Valley. Dixie Valley wells have penetrated marine siltstone, shale, sandstone, and volcaniclastic rocks exposed in the Stillwater Range (Bruton et al., 1997). The Miocene Table Mountain basalt overlies older sedimentary and igneous rocks and has been encountered at a depth of approximately 7,000 to 8,000 feet within Dixie Valley. It is overlain by a thick sequence of late Tertiary basin-fill sediments, including lacustrine, playa, and alluvial fan sediments. Hydrothermal alteration and mineralization from geothermal fluids has locally affected the rocks in the area (Bruton et al., 1997).

Structurally, Dixie Valley is an elongated down-dropped block, or graben, bounded by high-angle faults of Holocene age (Ryall and Vetter, 1982). The Dixie Valley fault lies beneath the west valley edge at the base of the Stillwater Range. Seismic activity subsequent to the tectonism that formed the Dixie Valley graben has further deformed the bedrock, resulting in a complex series of faults in the bedrock beneath the valley floor. Dixie Valley is located in an active seismic area. A major earthquake of magnitude 6.8 occurred in 1954 beneath Dixie Valley and created a visible scarp along the portions of the west margin of Dixie Valley (Ryall and Vetter, 1982).

3.12.2 Dixie Meadows

The proposed DM project site is located in the west-central part of Dixie Valley, approximately 13.5 miles south-southwest of the CC project site. It is at an elevation of approximately 3,380 feet immediately east of the alluvial fans at the base of the Stillwater Range. Section 3.10.1 summarizes the geologic setting of the area.

3.13 Soils

Soil types in the project areas were identified using the "Churchill County Area, Parts of Churchill and Lyon Counties" soil survey (U.S. Department of Agriculture National Resource Conservation Service [USDA NRCS], 2009). Descriptions of the soil types found in the lease areas are provided in this section.

Soil unit 343 is the Slaw-Trocken-Chuckles association. Slaw soils occur on 0-4 percent slopes, are well drained, occasionally flood, but never pond, and are moderately to strongly saline. The typical profile is composed of silt loam underlain by stratified very fine sandy

loam to silty clay. Trocken soils occur on 0-2 percent slopes, are well drained, occasionally flood, but never pond, and are moderately to strongly saline. The typical profile includes very gravelly loam and gravelly loamy coarse sand. Chuckles soils occur on 0-2 percent slopes, are moderately well drained, never flood or pond, and are moderately to strongly saline. The typical profile is composed of loam and silt loam underlain by stratified very fine sandy loam to silty clay. Soil unit 343 has a slight hazard of off-road or off-trail erosion and is poorly to moderately suited for natural surface road construction, primarily due to flooding potential and low strength (USDA NRCS, 2009).

Soil unit 184 is the Bluewing-Pineval association. Bluewing soils occur on 4-8 percent sloping fans or washes, are excessively drained, and flood rarely to occasionally, but never pond. The soil profile typically consists of very gravelly loamy sand underlain by stratified very gravelly sand to extremely loamy coarse sand. Pineval soils occur on 4-8 percent slopes, are well drained, and rarely flood and never pond. The typical soil profile includes very cobbly loam and very gravelly sandy clay loam underlain by stratified extremely gravelly sand to gravelly sandy loam. Soil unit 184 has a slight hazard of off-road or off-trail erosion and is moderately suited for natural surface road construction, due to flooding potential, sandiness, and slope (USDA NRCS, 2009).

Soil unit 330 is the Settlement-Louderback-Rustigate association. Settlement soils occur on 0-2 percent slopes, are poorly drained, have a water table depth of 12 to 36 inches, rarely flood and never pond, and are slightly to moderately saline. The typical soil profile consists of silty clay and clay. Louderback soils occur on 0-2 percent slopes, are somewhat poorly drained, have a water table at 36 to 40 inches, rarely flood and never pond, are very slightly or slightly saline, and support saline meadow vegetation. The typical soil profile is composed of sand underlain by stratified sand to loam. Rustigate soils occur on 0-2 percent slopes, are somewhat poorly drained, have a water table at 36 to 40 inches, rarely flood and never pond, and support a saline meadow vegetation community. The profile is typically silt loam underlain by loam. Soil unit 330 has a slight hazard of off-road or off-trail erosion and is moderately suited for natural surface road construction, primarily due to low strength and sandiness (USDA NRCS, 2009).

Soil unit 900 is composed entirely of playa. Playas occur on 0-1 percent slopes, are poorly drained, have a water table at the surface, rarely flood, but have frequent ponding, and are moderately or strongly saline. The typical soil profile is silty clay loam underlain by silty clay. Soil unit 900 has a slight hazard of off-road or off-trail erosion and is poorly suited for natural surface road construction, primarily due to frequent ponding, wetness, and low strength (USDA NRCS, 2009).

Soil unit 960 is the Kolda-Umberland association. Kolda soils occur on 0-2 percent slopes, are very poorly drained, have a water table at the surface, never flood, but frequently pond, are very slightly or slightly saline, and typically support wetland vegetation. The soil profile is typically silt loam, underlain by silty clay and clay. Umberland soils occur on 0-2 percent slopes, are somewhat poorly drained, have a water table at 18 to 30 inches, rarely flood, but never pond, are moderate to strongly saline, and support wet meadow vegetation. The soil profile is typically a silty clay loam underlain by silty clay. Soil unit 960 has a slight hazard of off-road or off-trail erosion and is poorly to moderately suited for natural surface road construction, primarily due to frequent ponding, wetness, and low strength (USDA NRCS, 2009).

3.13.1 Coyote Canyon

Soil units 184, 343, and 330 are present in the CC project area; a similar number of well pads are planned within each soil unit (Figure 9). The western portion of the CC lease area was not considered in this analysis because no Proposed Action is planned in this area of steep mountainous terrain.

3.13.2 Dixie Meadows

Soil units 900, 330, 343, 184, and 960 are present in the DM project area (Figure 10). Most of the proposed well pads are located within soil unit 900. The rest of the well pads are located in soil unit 330. Access roads cross soil units 184 and 343. A small portion of the DM lease area lies in soil unit 960; however, there are no proposed well pads or access roads located within this soil unit.

3.14 Visual Resources

BLM utilizes a visual resource management (VRM) process to manage the quality of landscapes on public land and to evaluate the potential impacts to visual resources resulting from development activities. VRM class designations are determined by assessing the scenic value of the landscape, viewer sensitivity to the scenery, and the distance of the viewer to the subject landscape. These management classes identify various permissible levels of landscape alteration, while protecting the overall visual quality of the region. They are divided into four levels (Classes I, II, III, and IV). Class I is the most restrictive and Class IV is the least restrictive in terms of changes that are allowed to the characteristic landscape (BLM, 1986).

Based on information contained in the *Consolidated Resource Management Plan* (BLM, 2001) and environmental assessments for other projects sharing this vicinity, both the CC and DM lease areas are located within a Class IV VRM category. The objective for this class is to provide for management activities that allow major modifications of the existing character of the landscape. The level of change to the characteristic landscape can be high. Activities in a Class IV category may dominate the view and be the major focus of viewer attention. However, every attempt should be made to minimize the impact of these activities through careful location, minimal disturbance, and repeating the basic elements.

The closest transportation route is Dixie Valley Road, which is designated State Route 121. The closest urban sensitive receptor (park, church, residence, school, or hospital) is located in Lovelock, Nevada, approximately 27 air miles west of the project sites. The Stillwater Mountain Range, with peaks higher than 8,500 feet, is located between the CC and DM lease areas and Lovelock. The closest receptor would be the 7 Devils Ranch located approximately 14 miles northeast of CC.

3.15 Lands

Most of the land in Dixie Valley is federal land managed by the BLM and nearly all of it is designated as having the highest geothermal resource potential of any BLM-managed public lands in the state (BLM, 2001). The federal government administers more than 82 percent of the land in Churchill County. In accordance with the BLM PEIS for Geothermal Development (BLM, 2008a) and the Churchill County Master Plan (2005), the expansion and

development of geothermal resources is supported and promoted for federal lands in this region in support of a national energy policy for renewables. A BLM designated utility corridor exists within Dixie Valley with the express purpose of providing an outlet for geothermal power to be produced in the valley (BLM, 2001). There is a transmission line within this corridor.

Small private parcels exist throughout the valley, and a large portion of the southern half of the valley is controlled by the Department of Defense for testing of low-level supersonic flight operations as part of the Fallon Range Training Complex.

The existing Terra-Gen Dixie Valley geothermal plant is just north of the CC and DM lease areas, and a small private ranch is approximately 12 miles northeast of the Dixie Valley geothermal plant. The area is relatively undeveloped and most of the valley is utilized for cattle grazing, with BLM assuming grazing management responsibility on adjacent military-controlled lands.

Several rights-of-way or other authorizations have been granted on public lands within the project areas. These include rights-of-way for transmission lines, roads, and geothermal leases. There are 24 BLM-registered geothermal well leases in the area.

A BLM right-of-way planning corridor exists in Dixie Valley with the express purpose of providing an outlet for geothermal power to be produced in the valley (BLM, 2001). There is an existing 230-kilovolt (kV) transmission line owned by TGP within this corridor. BLM also has prepared a PEIS for Geothermal Leasing in the Western U.S. (BLM, 2008a), which analyzes potential impacts of geothermal development and provides a list of stipulations and best management practices (BMPs) related to geothermal leasing and related development on BLM-managed public land. In 2008, BLM issued a Record of Decision (ROD) for geothermal leasing in the Western U.S., including adoption of Resource Management Plan amendments related to geothermal leasing (BLM, 2008d).

3.15.1 Coyote Canyon

The CC lease area is located in Township 24N, Range 36E, in Sections 2, 9, 10, 11, 12, 13, 14, 15, 16, 17, 21, 22, 23, and 24. The project area is located on land administered by BLM and leased for exploration activities to TGP. The Department of Defense operates the Gabbs North Military Operating Area (MOA) designated for low-level supersonic flight operations in the vicinity of Coyote Canyon.

The BLM Legacy Rehost (LR 2000) Report System and the BLM National Integration Land System (NILS) GeoCommunicator lists several non-producing geothermal leases and lease agreements within the leased area of the CC project, as well as producing leases, owned by TGP, within Sections 12 and 13 (BLM, 2009c). Within Section 12 is a right-of-way granted to the Navy for a remote relay station. Just east of the project area is a road right-of-way associated with the Terra-Gen Dixie Valley 230-kV transmission line, which runs southwest to northeast through Sections 12, 13, 14, 15, 21, and 22 of the lease area. There are also active lode mining claims located across Sections 2, 9,10,11,12, 13, 14, and 15 of the lease area (BLM, 2009c).

3.15.2 Dixie Meadows

The DM lease area is located in Township 22N, Range 35E, in Sections 4, 5, 8, 9, 10, 11, 15, 16, 17, 18, 19, and 20. The project components would be located primarily on BLM-managed lands. One well (Kettleman Number 28-4), and a portion of its access road, would be located on land controlled by the U.S. Navy for which TGP (through its wholly owned subsidiary, Nevada Power Vestors) owns the mineral rights.

The Department of Defense operates the Gabbs North MOA designated for low-level supersonic flight operations in the vicinity of Dixie Meadows, which also lies within the northwest boundary of Restricted Area 4816N of the Gabbs North MOA.

The BLM LR 2000 Report System and the BLM NILS GeoCommunicator list several non-producing geothermal leases within the lease area of the DM project, as well as lease agreements and lease nominations surrounding the lease area (BLM, 2009c). Just south of the project area are two rights-of-way for water well testing by the USGS in Sections 28 and 32, and northwest of the site in Section 6 is a right-of-way for a seismic station site run by University of Nevada-Reno. Surrounding the site in Sections 4, 5, 8, 17, 18, and 19 are lands controlled by the Department of Defense. Just north of State Route 121, the BLM right-of-way alignment for the Terra-Gen Dixie Valley transmission line and its associated access road runs southwest to northeast through the center of the project. There are no active mining claims in this area.

SECTION 4

Environmental Effects

This section evaluates the potential direct, indirect, and cumulative impacts that could result from the Proposed Actions. Section 4.1 identifies potential direct and indirect impacts, and Section 4.4 evaluates potential cumulative impacts when considered in the framework of past, present, and reasonably foreseeable future activities.

4.1 Proposed Actions – Direct and Indirect Impacts

The following subsections discuss the potential impacts of the Proposed Actions and the No Action Alternative.

4.1.1 Air Quality

Air emissions from the Proposed Actions at the CC and DM sites would be primarily attributable to the following air pollution sources:

- Heavy equipment and drill rig (diesel exhaust and GHG emissions)
- Earth moving and grading (particulate fugitive and GHG emissions)
- Well testing (H_2S and GHG emissions)

Because the proposed exploration activities at the CC and DM sites would have approximately the same potential impacts on air quality, the following discussion applies to both sites.

Heavy Equipment, Drill Rig, and Earth-moving and Grading Activities. Fugitive dust emissions during construction and from construction vehicles using the access roads would result in temporary emissions of particulate matter, but these emissions would be of larger particulate sizes and the majority of these fugitive particulate emissions would settle before leaving the leasehold site. Since the proposed total disturbed area is greater than 5 acres for CC and DM, the NDEP Bureau of Air Pollution Control (BAPC) requires a Surface Area Disturbance Permit and corresponding Dust Control Plan. The NDEP BAPC has jurisdiction of air quality programs over all counties in Nevada except Washoe and Clark counties.

Short-term construction and drill rig exhaust emissions, including volatile organic compounds, carbon monoxide, nitrogen dioxide, PM_{10}, hazardous air pollutants, and oxides of sulfur would result from internal combustion engines and heavy equipment used at the construction site. These short-term fugitive emissions would be below the threshold level that would require a permit from NDEP BAPC.

Well Testing. Small quantities of naturally occurring non-condensable gases, such as H_2S and GHGs (carbon dioxide and much smaller amounts of methane) would be emitted to the air during well testing. H_2S initial concentrations in CC and DM area geothermal fluids are estimated at approximately 70 ppm, and methane concentrations are estimated at less than 2 percent of non-condensable gases, based on historical data (Freeman, 1986). This estimate is conservative in that more recent tests at the existing Dixie Valley geothermal plant indicate

lower concentrations (TGP, 2009). As discussed in Chapter 2 of this EA, up to 15 slim wells and/or exploration wells up to 10,000 feet deep at DM and up to 15 slim wells and/or exploration wells at CC would be drilled and performance tested. Well testing would be conducted for an average of 3 days (24 hours per day) for each well. It is anticipated that the initial flow rates of fluid from each well into its reserve pit (and to the existing Dixie Valley sumps, as required) would be approximately 500 to 1,500 gallons per minute on average (with up to 700,000 pounds per hour geothermal flow) depending upon the productivity of the well. Based on this estimate, total potential emissions from the proposed well testing would be approximately 26.40 tons H_2S (1.76 tons per well) at each site (CC and DM).

Air emission sources that exceed 5 tons per year of criteria air pollutant emissions require an air permit from the NDEP BAPC. This permit would be a temporary permit for operations of less than 1 year duration or a stationary source permit for operations greater than 1 year duration.

The Proposed Actions would each require temporary permits because project-related emissions would be greater than 5 tons per year and performance testing would last less than 1 year. If the total activity duration were extended beyond 1 year, TGP would obtain a stationary source permit.

Heavy Equipment and Well Testing. Cumulative GHG emissions from well testing and construction-related diesel engines were reviewed and determined to be less than 25,000 tons per year, which is below the level that triggers federal reporting requirements. Additionally, according to State of Nevada regulations, only electrical generating power plants are required to report GHG emissions; therefore, the Proposed Actions would not be required to report GHG emissions.

To minimize air pollution emissions from construction activities and construction and drill rig diesel engines, the following BMPs for fugitive dust and diesel exhaust would be implemented during operational activities:

- Surfacing access roads with aggregate materials, wherever appropriate
- Using dust abatement techniques, such as watering on unpaved, unvegetated surfaces to minimize airborne dust, as needed (The source of water to be used for dust abatement is described in Section 2.1.8.)
- Posting and enforcing speed limits to reduce fugitive dust (speed limit of 15 miles per hour, as necessary)
- Applying dust abatement techniques (such as watering, requiring loader buckets to be emptied slowly, minimizing drop heights, etc.) to earth-moving, excavating, trenching, and grading activities
- Minimizing equipment and vehicle idling times during construction activities

4.1.2 Cultural Resources

Consultation with the SHPO on Determinations of Eligibility and Finding of Effect for cultural resources located within the project area are ongoing, and finalizing the evaluation below is contingent on completing that consultation process. Following the State Protocol

Agreement between the Bureau of Land Management, Nevada and the Nevada State Historic Preservation Office for Implementing the National Historic Preservation Act, 2009, Appendix H. Avoiding Properties, Sections A and B, archaeological resources recommended as eligible will be avoided.

Coyote Canyon.

Six archaeological resources were recommended as eligible. Following the State Protocol Agreement between the Bureau of Land Management, Nevada and the Nevada State Historic Preservation Office for Implementing the National Historic Preservation Act, 2009, Appendix H., Sections A and B., the design of the proposed project construction (pads or roads) would be relocated to avoid those sites recommended as eligible. A thirty meter buffer will be placed around historic properties identified within the APE. In the event that any construction overlaps this buffer an archaeological monitor will be on site during the construction.

Dixie Meadows.

One archaeological resource was recommended as eligible. Following the State Protocol Agreement between the Bureau of Land Management, Nevada and the Nevada State Historic Preservation Office for Implementing the National Historic Preservation Act, 2009, Appendix H., Sections A and B., the design of the proposed project construction (pads or roads) would be relocated to avoid those sites recommended as eligible. A thirty meter buffer will be placed around historic properties identified within the APE. In the event that any construction overlaps this buffer an archaeological monitor will be on site during the construction.

4.1.3 Native American Religious Concerns

Consultation regarding the CC and DM sites between the BLM and federally recognized Native American tribes is ongoing. During consultation for the proposed project following concerns were identified: cultural resources including historic properties; continued access and use of the Dixie Hot Springs for healing and spiritual purposes; and other resources that may be effected by the current project.

4.1.4 Paleontological Resources

Direct impacts to paleontological resources could result from the mechanical destruction of fossils as a consequence of uncontrolled excavations of paleontologically sensitive sedimentary units. This includes grading, and excavating and drilling. Other activities, such as laying roadway gravel over the top of paleontologically sensitive sediment, would have little or no impact on paleontological resources. Indirect effects to paleontological resources could include unauthorized fossil collection after fossil-rich sediment is exposed by excavation, in the absence of measures to restrict public access to such sites or to educate workers on paleontological resource avoidance.

Coyote Canyon. Construction activities that include surface disturbance of the immediate subsurface at one well pad (Well 61-15) would have the potential to impact paleontological resources because subfossil wood occurs in the immediate vicinity (PFYC = 4). Prior to construction at this site, this impact would be mitigated by moving the location of Well 61-15 to the west away from this resource, staking for avoidance that area within Sections 14

and 15 where subfossil wood exists, subsequent avoidance of the area during construction, and by worker education that would include the importance of paleontological resources avoidance.. The paleontological potential of the other 24 well pads and their access routes is low (PFYC Class 2), and therefore impacts to paleontological resources are not expected.

Of the 25 well sites in the CC area, only one possesses high (PFYC Class 4) paleontological sensitivity (Well 61-15), because of the presence of subfossil wood on the surface in the immediate vicinity. The subsurface potential of all well pads in the CC area is considered to be low (PFYC Class 2) because they are located at sites underlain by alluvium or oxidized playa sediments. Impacts to paleontological resources from project development in the CC area would therefore not occur because the one area designated PFYC Class 4 (high sensitivity) will be avoided by relocation of the well pad, and by educating workers on paleontological resources avoidance.

Dixie Meadows. Because all well sites occur within the limit of the current dry lake, they possess low (PFYC Class 2) paleontological potential. The area possessing unknown potential with the possibility of fossils occurring at depth (PFYC Class 3b) lies to the east of the wells and their associated access roads. In this area deep, relatively unweathered lacustrine sediment and spring discharge deposits occur, and theses sediments have yielded scientifically important paleontological resources in other portions of the Great Basin. A north-south segment of access road is the only portion of the Dixie Valley project area to cross sediments that have unknown potential (PFYC Class 3b). This would be mitigated by assuring that the roadway in that area is not bladed, but instead would consist of material imported to create a roadbed elevated above potentially sensitive sediments.

With the exception of this access road, no project facilities are proposed for these areas, and therefore, with avoidance by building up of the access road bed, no impact to paleontological resources is expected.

4.1.5 Biological Resources

4.1.5.1 Vegetation

Impacts to vegetation would be minimized by reseeding all areas of access roads and well pads not required for subsequent energy production using a BLM-approved native seed mixture. Topsoil would be salvaged whenever possible and reused in a timely manner.

Withdrawal of groundwater for flow testing has the potential to affect hydrophytic marsh vegetation that is supported by hot springs in the vicinity of DM by lowering the water table. This potential impact is discussed in the water quality section of this EA (Section 4.1.8). Disturbance to marsh vegetation would be avoided to the extent possible.

Coyote Canyon. The specific locations of the 15 wells to be installed at CC would be determined prior to drilling. This analysis conservatively assesses impacts based on the potential maximum number of well locations identified within each vegetation type to identify impacts to vegetation, even though the area disturbed by CC exploration activities would not be more than 73 acres.

According to SWReGAP analysis, up to 20 acres of disturbance could be located on intermountain basins playa, which is generally lacking vegetation, although scattered salt-tolerant communities also occur (USGS, 2004). Implementing the Proposed Actions could

lead to the disturbance of up to 62 acres of intermountain basins mixed salt desert scrub and up to 17 acres of salt-tolerant communities. In addition, disturbance could occur to small areas of fringing wetland vegetation associated with seeps and springs in the vicinity of well pads and access roads on the margin of the playa; however, this disturbance would be minimized by implementation of the BMPs described in Sections 4.1.8.1 and 4.1.10.1.

Dixie Meadows. The specific locations of the 15 wells to be installed at DM would be determined prior to drilling. This analysis conservatively assesses impacts based on the potential maximum number of well locations identified within each vegetation type to identify impacts to vegetation, even though the area disturbed by DM exploration activities would not be more than 73 acres.

According to SWReGAP analysis, the area of disturbance is generally lacking vegetation, although scattered salt-tolerant communities also occur (USGS, 2004). The majority of disturbance to vegetation would occur to salt-tolerant communities. Up to 5 acres of intermountain basins mixed salt desert scrub would be disturbed from access road construction. Disturbance may occur to small areas of fringing wetland vegetation associated with seeps and springs in the vicinity of well pads 28-4 and 32- 9; however, this disturbance would be minimized by implementation of the management practices described in Sections 4.1.8.1 and 4.1.10.1.

4.1.5.2 Invasive, Non-native Species

The Proposed Actions have the potential to increase the spread of invasive, non-native species. Weed seeds can germinate when soils are disturbed by construction activities, particularly where available soil moisture is increased by application of water for dust suppression. Weeds also could be introduced by construction equipment brought to the project from infested areas or by the use of seed mixtures or mulching materials containing weed seeds.

The potential for the Proposed Actions to increase the spread of invasive, non-native species would be minimized through the use of BMPs, including mapping and treating weed infestations prior to disturbance or during construction, and use of certified weed-free seed and mulching materials, as described in Section 2.1.

A noxious weed control program consisting of monitoring and eradication for species listed on the Nevada Designated Noxious Weeds List (NRS 555.010) also would be implemented. With implementation of these measures, no long-term impacts associated with invasive, non-native species are anticipated.

4.1.5.3 Migratory Birds

Direct impacts stem from approximately 73 acres of actual habitat that would be disturbed in both CC and DM during the life of the Proposed Action, although effective habitat loss from the disturbance and fragmentation may encompass a larger area for some species. Construction, human activity, and increased noise in the area from construction and drilling could temporarily displace migratory birds from the area. However, large tracts of similar habitat are found adjacent to the project areas, and migratory birds would likely return to the area after construction.

The Migratory Bird Treaty Act (MBTA) analyzes requirements related to ground-disturbing activities during the migratory bird nesting season. To meet these requirements, habitat for migratory birds would be eliminated within areas of proposed disturbance prior to the nesting season. In the event this elimination measure is not implemented, if ground-disturbing activities do take place during the migratory bird nesting season, migratory bird nest surveys would be conducted early in the nesting season by a qualified biologist acceptable to BLM. This survey would be conducted to identify either breeding adult birds or nest sites within the specific areas to be disturbed. If active nests are present within these areas to be disturbed, TGP would coordinate with BLM to develop appropriate protection measures for these sites, which may include avoidance, construction constraints, and/or the establishment of buffers.

To minimize impacts to migratory birds and other wildlife, in addition to the management practices described above, well pads and roads would be recontoured and reseeded following completion of the Proposed Actions as described in Section 2.1.10. Erosion-control measures would be implemented as described in Section 4.1.10. Topsoil would be salvaged and reused whenever possible and in a timely manner.

4.1.5.4 Sensitive Species

Threatened and Endangered Species

Because no threatened or endangered species were observed during field surveys or are known to exist in either CC or DM lease areas, there would be no impacts to threatened or endangered species from the Proposed Action (BLM, 2003; USFWS, 2009a; USFWS, 2009b).

BLM Sensitive Species

Sage grouse may use the project area as a water source. Mitigation measures as described in Section 4.1.8 would be implemented to minimize impacts to water resources; therefore, negligible impacts to sage grouse are expected as a result of implementation of the Proposed Actions.

No sensitive bat roosting habitat is expected to be disturbed due to implementation of the Proposed Actions. However, direct impacts stem from approximately 73 acres of actual habitat that would be disturbed in both CC and DM during the life of the Proposed Action, although effective habitat loss from the disturbance and fragmentation may encompass a larger area for some bat species. Bat species in the area are insectivorous and it is not expected that insect populations would be adversely affected by construction activities. There are large tracts of similar habitat in the vicinity of the project area for bats to forage; therefore, no impacts to sensitive bat species are anticipated.

In the project areas for both CC and DM, resident BLM sensitive avian species (including golden eagle, ferruginous hawk, prairie falcon, and loggerhead shrike) and breeding sensitive avian species (such as burrowing owl and vesper sparrow) would lose approximately 73 acres of habitat at each site as a result of the Proposed Actions. Effective habitat loss from disturbance and fragmentation may encompass a larger area for some avian species. Indirect effects from noise and increased human activity could temporarily displace and reduce breeding success of these sensitive avian species; however, the species would be able to return to the disturbed areas upon completion of ground-disturbing activities. No population-level impacts to the sensitive avian species are expected as a result of implementation of the Proposed Actions. Because sensitive avian species would likely

return to the area after construction is complete and because similar habitat is available near the project area, impacts to sensitive avian species are expected to be minor from implementation of the Proposed Actions. There are large tracts of similar habitat in the vicinity of the project area; therefore, no impacts to BLM sensitive avian species are anticipated.

Impacts to BLM sensitive species associated with marsh habitats (e.g., northern leopard frog, sandhill crane, snowy plover, black tern, long-billed curlew, and least bittern) would be similar to avian species described above.

Bighorn sheep habitats within the Stillwater Range are not anticipated to be disturbed by construction or drilling activities because drilling and road construction would not occur in these areas. Therefore, no impacts to bighorn sheep are expected as a result of the implementation of the Proposed Actions.

4.1.5.5 Wildlife Resources

Coyote Canyon. Direct impacts to wildlife species stem from disturbance of approximately 73 acres of actual habitat, although effective habitat loss from disturbance and fragmentation may encompass a larger area for some species. Because the specific locations of the 15 wells to be installed would not be determined until drilling begins, the potential habitat impacts are calculated based on the worst-case scenario for each habitat type (assuming the maximum number of wells in each habitat type). As a result, the total acreage impacts reflected in this analysis add up to more than 73 acres. Up to 62 acres of intermountain basins mixed salt desert scrub, up to 17 acres of intermountain basins greasewood flat/saltgrass meadows/iodinebush scrub, and up to 20 acres of intermountain basins playa habitat could be disturbed by implementation of the Proposed Actions. In addition, disturbance may occur to small areas of fringing wetland vegetation associated with seeps and springs in the vicinity of well pads and access roads on the margin of the playa; however, this disturbance would be minimized by implementation of the BMPs described in Section 4.1.5.1.

Construction of access roads and installation of wells would result in direct loss of habitat. Direct impacts from mortality to smaller, less mobile species could occur during construction if those species are present. Noise, human presence, and heavy equipment present during construction activities are likely to temporarily displace wildlife that may be present or near the project area and could have an indirect effect on wildlife species in the area. These indirect effects could reduce breeding success of species that are sensitive to human activity. These impacts are expected to be temporary and short term for the duration of the proposed construction and drilling activities. Wildlife would be able to return to the disturbed areas upon completion of ground-disturbing activities. No population-level impacts to wildlife species are expected as a result of implementation of the CC Proposed Action. Because wildlife would likely return to the area after construction is complete and because similar habitat is available near the project area, impacts to wildlife are expected to be minor from implementation of the CC Proposed Action.

Dixie Meadows. Direct impacts to wildlife species stem from disturbance of approximately 69 acres of habitat within the DM lease area and approximately 4 acres within the Lamb Mineral Interests property, although effective habitat loss from disturbance and fragmentation may encompass a larger area for some species. Because the specific locations

of the 15 wells to be installed would not be determined until drilling begins, the potential habitat impacts are calculated based on the worst-case scenario for each habitat type (assuming the maximum number of wells in each habitat type). As a result, the total acreage impacts reflected in this analysis add up to more than 73 acres. Up to 5 acres of intermountain basins mixed salt desert scrub, up to 22 acres of intermountain basins greasewood flat /saltgrass meadows/iodinebush scrub, and up to 80 acres of intermountain basins playa habitat could be disturbed by implementation of the DM Proposed Action. Disturbance could occur to small areas of fringing wetland vegetation associated with seeps and springs in the vicinity of well pads 28-4 and 32-9; however, this disturbance would be minimized by implementation of BMPs as described in Sections 4.1.8 and 4.1.10.

Direct impacts from mortality to smaller, less mobile species could occur during construction if those species are present. Noise, human presence, and heavy equipment present during construction activities are likely to temporarily displace wildlife that may be present or near the project area and could have an indirect effect on wildlife species in the area. These indirect effects could reduce breeding success of species that are sensitive to human activity. These impacts are expected to be temporary and short term for the duration of the proposed construction and drilling activities. Wildlife would be able to return to the disturbed areas upon completion of ground-disturbing activities. No population level impacts to wildlife species are expected as a result of implementation of the DM Proposed Action. Because wildlife would likely return to the area after construction is complete and because similar habitat is available near the project area, impacts to wildlife are expected to be minor from implementation of the DM Proposed Action.

4.1.6 Livestock Grazing

As outlined in Tables 6 and 7, the proposed projects would collectively disturb up to 146 acres (73 acres for CC and 73 acres for DM) within various grazing allotments. As stated in Section 2.1, to maintain flexibility in location of slim wells and/or exploration wells, TGP is proposing 25 potential well locations at CC and 28 potential locations at DM. However, a maximum of 15 slim and/or exploration wells would be drilled in each project area.

Conservatively, it is estimated that up to 2.81 AUMs, or less than three one-hundredths of one percent of the 10,521 AUMs within the three grazing allotments, would be compromised by disturbance from the projects. Due to this small disturbance, there is no impact to the AUMs from the Proposed Actions, and no reduction in authorized grazing use would be required. All activities for both projects are located away from sources of water in the vicinity and would not compromise livestock access to available water sources.

Coyote Canyon. The CC Proposed Action could disturb up to 73 acres, less than one percent of the 127,194 acres comprising the Boyer Ranch Allotment, reducing the 1,790 AUMs within the allotment by approximately 1.02 AUMs. No reduction in authorized grazing use would be required.

Dixie Meadows. The DM Proposed Action would disturb up to 69 acres within the DM lease area, or less than less than 1 percent of the 10,512 acres comprising the three allotments within DM. Because it is unknown at this time which of the 28 potential well locations would be used to install the 15 wells planned for DM, this analysis conservatively assesses

impacts based on the potential maximum number of well locations identified within each allotment.

If the all the wells proposed for the Boyer Ranch Allotment were installed, the DM Proposed Action could disturb up to 44 acres within the Boyer Ranch Allotment. This is less than 1 percent of the 127,194 acres comprising the Boyer Ranch Allotment, reducing the 1,790 AUMs within the allotment by approximately 0.62 AUM. No reduction in authorized grazing use would be required.

If all the potential well locations identified within the Cow Canyon Allotment were utilized, the DM Proposed Action could disturb up to 40 acres within the Cow Canyon Allotment. This is less than 1 percent of the 146,179 acres comprising the Cow Canyon Allotment and would reduce the 2,390 AUMs within the allotment by approximately 0.65 AUM. No reduction in authorized grazing use would be required.

If all the potential well locations within the Dixie Valley Allotment were utilized, the DM Proposed Action could disturb up to 23 acres within the Dixie Valley Allotment. This is less than 1 percent of the 282,801 acres comprising the Dixie Valley Allotment and would reduce the 1,790 AUMs within the allotment by approximately 0.52 AUM. No reduction in authorized grazing use would be required.

4.1.7 Wastes, Hazardous or Solid

Diesel fuel, lubricants, hydraulic fluids, and drilling chemicals (drilling mud, caustic soda, barite, etc.) would be transported to, stored on, and used at both project areas. The Proposed Action must conform to federal and state requirements for handling these hazardous materials. Typical of most construction projects, the storage and use of these materials could result in minor, incidental spills of diesel fuel or oil to the ground during fueling of equipment, filling of fuel storage tanks, and handling lubricants. Other incidental spills could be associated with equipment failures such as ruptured hoses. Management practices, described in Section 2 and including development of a spill plan, use of secondary containment structures, and worker training, would be used to prevent the release of hazardous wastes to the environment. Solid wastes would be transported offsite to a landfill. Implementation of these procedures would prevent or minimize potential impacts on the environment due to generation of hazardous or solid wastes.

4.1.8 Water Quality, Wetlands, and Floodplains

As described in Section 2, access roads would be constructed as part of the Proposed Actions. Roads and wells would be located and designed to avoid impacts to surface water features such as springs, seeps, ponds, and ephemeral washes to the extent possible.

Well testing would involve removing thermal groundwater and discharging it to the drill pad reserve pit. Excess fluids from each well would be trucked to existing reserve pits at the Dixie Valley geothermal power plant. The anticipated test flow rates (500 to 1,500 gallons per minute) and durations (average of 3 days) may result in 2 to 6 million gallons of thermal groundwater being extracted from the geothermal aquifer for each well during testing. Installation and testing of deep geothermal wells has the potential to cause impacts on surface water through accidental release of geothermal fluids to surface water features. The hot springs in the DM lease area indicate there may be a hydrologic connection between

the geothermal aquifer and the aquifer that feeds surface water features, such as springs. To prevent a release of geothermal fluids to surface water features, drilling muds and geothermal fluids would be contained in the reserve pit or trucked to the existing sumps at the Dixie Valley geothermal power plant when quantities dictate.

BMPs for well installation and testing would be implemented as described below. In addition, a hydrologic evaluation plan would be put in place to confirm the expectation that no impacts to quality, quantity, or temperature of surface water occurred as a result of slim well and/or exploration well installation and testing.

The release of hazardous materials to the environment could affect surface water features. BMPs to prevent such a release, including development of a construction Stormwater Pollution Prevention Plan (SWPPP) and spill prevention, control, and countermeasures (SPCC) plan, are described in Section 4.1.7. Similarly, erosion could affect surface water quality. Erosion-control measures would be implemented as described in Section 4.1.9. In addition to these measures, the following steps would be undertaken during construction to avoid or minimize the potential for impacts to surface water or groundwater in the area:

- When permanent new access roads must cross ephemeral washes, rolling dips would be installed. The rolling dips would be designed to accommodate flows from at least a 25-year storm event. Culverts may be used wherever rolling dips are not feasible.
- Drill pad reserve pits would be compacted during construction and settled bentonite clay from drilling mud would accumulate on the bottom of the drill pad reserve pit to act as an unconsolidated clay liner, reducing the potential for drilling fluid to percolate to groundwater.
- TGP would obtain necessary working in waters and/or groundwater discharge permits and provide a Notice of Intent to NDEP prior to well pad construction.
- Wetland boundaries would be avoided to the extent possible.
- A BLM-approved grouting and casing program for construction of slim well and/or exploration wells would be implemented to prevent water quality effects on groundwater during or after well installation.
- Borehole geophysics analyses (cement bond logs) would be conducted to document that well-casing grouting activities provide an effective seal, isolating the geothermal aquifer from shallow alluvial aquifers and therefore minimizing potential impacts on surface washes, springs, seeps, or floodplains.
- BMPs would be implemented to ensure that any geothermal fluid encountered during the drilling does not flow uncontrolled to the surface. These include the use of "blow-out" prevention equipment during drilling and the installation of well casing cemented into the ground.
- A hydrologic evaluation plan will be submitted to the BLM for approval prior to drilling.

Surface Water and Groundwater Monitoring Plan

Standard aquifer testing procedures would be employed at targeted depth intervals as the boreholes for slim wells and/or exploration wells are advanced. The vertical boundaries of the aquifers, the depth of aquifers (non-thermal and thermal) penetrated during drilling, would be noted from the drilling log. The horizontal boundaries would be noted if any are reflected on time-drawdown plots produced during aquifer testing. Borehole geophysics analysis would be conducted from the ground surface to the total depth of the borehole. Aquifer testing would be used to determine drawdown associated with pumping. If possible, an assessment of whether the aquifer is confined or unconfined would be made, as well as an estimate of aquifer thickness and a qualitative assessment of its relative productivity. The temperature of penetrated aquifers would be noted. A hydrologic evaluation plan would be put in place to confirm the expectation that no impacts to quality, quantity, or temperature of surface water and groundwater occurred as a result of slim well and/or exploration well installation and testing.

Selected seeps and springs, determined in consultation with BLM, would be monitored for basic water quality, flow, and temperature prior to and during the Proposed Actions.

Coyote Canyon. As discussed in Section 3.9, palustrine emergent wetlands associated with springs and seeps are present within the CC lease area in Sections 23 and 24 (Figure 6). Based on a review of USGS topographic maps and NDWR groundwater basin mapping, these water bodies are not jurisdictional waters of the U.S. because they are located in an internally drained desert basin that is distant from and lacks hydrographic connectivity to major rivers and water bodies. A request for jurisdictional determination concurring with this finding is pending from the U.S. Army Corps of Engineers. Although the waters are not jurisdictional waters of the U.S., construction activities would avoid wetland areas associated with seeps and springs to the extent possible.

Dixie Meadows. Eleven potential wells and associated access roads are located within the FEMA FIRM Zone A "SFHA subject to inundation by the 1% annual chance flood" (FEMA, 2008b; Figure 7). The well pads would be constructed at ground level, using aggregate to create a stable foundation. As described in the BMPs, the wells would be grouted and cased so that flood water could not penetrate if wells are inundated.

As discussed in Section 3.9, wetland marshes associated with springs (hot and cold) and seeps are present within the DM lease area in Sections 4, 5, 8, 9, 17, and 19 (Figure 8). Similar to CC, above, a request for jurisdictional determination is pending from the U.S. Army Corps of Engineers concurring with the finding that the springs and seeps are not waters of the U.S. Although the waters are not jurisdictional waters of the U.S., construction activities would avoid wetland areas associated with seeps and springs to the extent possible.

4.1.9 Geology and Minerals

A history of recent (1954) seismicity and the presence of hot springs on the surface trace of the Dixie Valley fault zone led Ryall and Vetter (1982) to suggest that Dixie Valley would have a relatively high potential for induced seismicity if injection of geothermal fluids into deep wells occurs. Because the exploration activities described in this document do not involve injecting fluids into the slim wells and/or exploration wells, induced seismicity is not expected to occur related to exploration activities.

4.1.10 Soils

The hazard of off-road or off-trail soil erosion in the project areas is slight (USDA NRCS, 2009). The soils are poorly to moderately suited for natural surface road construction (USDA NRCS, 2009); therefore, TGP would implement the BMPs described below when constructing access roads and well pads.

The loss of soil productivity is expected to be low because the soils have low native fertility and no farmlands, as covered under the Farmland Protection Policy Act (Public Law 97-98, 7 USC 4201), are present within the CC or DM lease areas.

The release of hazardous materials to the environment could affect soil resources. BMPs to prevent such a release, including development of a SPCC plan, are described in Section 4.1.7.1.

Erosion and loss of soil productivity would be minimized by implementing the following BMPs during access road and well pad construction:

- Excavation into native soil during construction of well pad reserve pits would be minimized to the maximum extent possible.
- Wells and roads not required for development purposes would be re-contoured to blend with the surrounding topography, in accordance with lease stipulations.
- Topsoil would be salvaged and reused whenever possible and in a timely manner.
- Temporarily disturbed areas would be reseeded where previously vegetated using a BLM-approved seed mixture.
- Erosion control measures, including but not limited to silt fencing, diversion ditches, water bars, temporary mulching and seeding, and application of gravel or rip rap, would be installed where necessary immediately after completion of construction activities to avoid erosion and runoff.
- Access roads would follow existing contours to the maximum extent possible. In areas where new access roads must be constructed across slopes, erosion control measures would be installed as necessary, in accordance with Gold Book standards (BLM, 2007a).
- An average of 6 inches of gravel would be used as road surface because roads would be used during all seasons. Up to 3 feet of gravel may be used on some sections of road, and no gravel would be used on road sections where the natural surface is adequate.
- Additional gravel would be laid down when ground conditions are wet enough to cause rutting or other noticeable surface deformation and severe compaction. As a general rule, if vehicles or other project equipment create ruts in excess of 4 inches deep, a gravel surface would be installed prior to additional use.
- When construction occurs in areas of very soft soils, up to 3 feet of aggregate would be used.
- An NDEP BAPC Surface Area Disturbance documenting the BMPs to be used would be required for the project because the surface disturbed would be greater than 5 acres.

- Overland route corridors may be used for infrequently accessed locations.

Coyote Canyon. Construction of roads and well pads in the CC project area could disturb up to 73 acres (see Table 6). Erosion and loss of soil productivity would be minimized as described above.

Dixie Meadows. Construction of roads and well pads in the DM project area could disturb up to 69 acres on BLM-managed public lands, and up to 4 acres on the Lamb Mineral Interests property (see Table 7). Erosion and loss of soil productivity would be minimized as described above.

4.1.11 Visual Resources

Temporary impacts to visual resources would occur during road and well pad construction activities at the project area and as a result of the presence of drill rigs. Drilling equipment would be seen from Dixie Valley Road. Roads, drill pads, and laydown areas are near ground level and would not affect visual resources. Construction impacts would be minor and short-term and would be consistent with the objectives of Class IV VRM objective.

During the drilling operations, the drill rig could extend up to about 160 feet above ground level. These operations would be 24 hours per day, 7 days per week. During drilling operations, the rig would be visible at distances of greater than 1 mile from the respective drill sites, and lights used when drilling at night would increase rig visibility. All drill rig and well test facility lights would be limited to those required to safely conduct the operations and would be shielded and/or directed in a manner that focuses direct light to the immediate work area.

Access roads would remain after the wells have been drilled until reclamation is conducted as described in Section 2.1.10. Laydown areas and concrete slab drill pads would be removed as described in Section 2.1.10 if they are no longer needed.

The Stillwater Mountain Range, with peaks higher than 8,500 feet, is between the CC and DM lease areas and Lovelock. The CC and DM project areas are, therefore, not visible from the Lovelock area. The CC and DM project areas are located approximately 14 miles away from and The 7 Devils Ranch and are therefore not likely to be visible.

4.1.12 Lands and Realty

Existing linear rights-of-way in the vicinity of the CC and DM lease areas include the Terra-Gen Dixie Valley 230-kV transmission line and its associated access road and State Route 121 to the south, which would be used only for access to the project areas. The Proposed Actions do not include drilling or other exploration activities in the State Route 121 right-of-way. The use of the lands for geothermal development would not preempt the other current uses of the land identified in Section 3.13.

The Department of Defense operates the Fallon Range Training Complex, a portion of an MOA designated for low-level supersonic flight operations over the Dixie Valley region. Impacts to the MOA are reviewed by the Federal Aviation Administration (FAA) if the FAA obstruction thresholds are triggered. The Proposed Actions would not trigger the FAA obstruction thresholds (14 CFR Part 77.13) because they would not include:

- Construction or alteration exceeding 200 feet above ground level

- Construction or alteration:
  - within 20,000 feet of a public use or military airport which exceeds a 100:1 (horizontal:vertical) surface from any point on the runway of each airport with at least one runway more than 3,200 feet
  - within 10,000 feet of a public use or military airport which exceeds a 50:1 surface from any point on the runway of each airport with its longest runway no more than 3,200 feet
  - within 5,000 feet of a public use heliport which exceeds a 25:1 surface
- Highway, railroad, or other traverse way whose prescribed adjusted height would exceed the above noted standards
- Construction or alteration located on a public use airport or heliport regardless of height or location

4.2 No Action Alternative

Project features would not be constructed under the No Action Alternative. Therefore, none of the resources described in Section 3 would be affected by the Proposed Action.

4.3 Residual Impacts

Solid waste would be generated as a result of the Proposed Actions, resulting in residual impacts. The waste would be disposed in approved, permitted disposal facilities. Impacts to vegetation and soils would be mitigated by interim and final reclamation process. Impacts to wildlife, including migratory birds and sensitive species, would be temporary. The potential introduction of invasive, non-native species as a result of the Proposed Actions would be minimized through the use of BMPs but some potential for the spread of non-native species could remain once all reclamation procedures have been completed.

4.4 Cumulative Impacts Analysis

Cumulative impacts are defined by the CEQ in 40 CFR 1508.7 as "impacts on the environment which result from the incremental impact of the action when added to other past, present, and reasonably foreseeable future actions regardless of what agency (federal or non-federal) or person undertakes such other actions." Cumulative impacts from geothermal leasing in the Western United States were analyzed as part of the PEIS (BLM, 2008a).

The following discussion evaluates the potential impacts of the Proposed Actions when taken in combination with one another and the potential impacts of known past, present, and reasonably foreseeable future actions in the analysis area.

Unless otherwise identified below, the analysis area for cumulative impact consideration is the same as the analysis area for the resource in Section 4.1. For purposes of assessing cumulative impacts, both the CC and DM projects are considered together and cumulative to one another.

4.4.1 Past and Present Actions

Current land use activities in the vicinity include geothermal energy production, grazing, and wild horse management. In the past, mining claims were active in the vicinity, but no mining activities are currently known. A BLM right-of-way planning corridor exists within Dixie Valley with the express purpose of providing an outlet for geothermal power to be produced in the valley (BLM, 2008a). Currently, there is a transmission line within this corridor, and the 62-MW Dixie Valley geothermal power plant has been producing energy here for more than 20 years.

Small private parcels exist throughout the valley, and a large portion of the southern half of the valley is owned by the Department of Defense for testing of low-level supersonic flight operations.

4.4.2 Reasonably Foreseeable Future Actions

Reasonably foreseeable future actions constitute those actions that are known or could reasonably be anticipated to occur within the study area, within a time frame appropriate to the expected impacts from the Proposed Actions. For the Proposed Actions, the time frame for potential future actions is assumed to be the duration of the lease, or approximately 35 years. Future activities are anticipated to include all current land use activities (grazing, current geothermal energy production, and wild horse management) as well as geothermal development. There are currently 24 geothermal leases in Dixie Valley, and additional geothermal exploration and development is likely during the duration of the CC and DM leases.

If the proposed exploration well testing determines that geothermal energy production would be cost effective, TGP proposes to construct and operate geothermal power plant projects at both the CC and DM lease areas using geothermal fluid to generate approximately 62 megawatts gross of electricity each.

4.4.3 Cumulative Impacts

4.4.3.1 Air Quality

Air quality impacts from the Proposed Actions at CC and DM would consist only of temporary impacts during well construction, including fugitive dust from construction vehicles and hydrogen sulfide emissions during well testing. If well installation activities are performed concurrently at other sites, the Proposed Actions could contribute to a cumulative temporary increase in fugitive dust and hydrogen sulfide emissions. These impacts would be minimized through the use of as the management practices described in Section 4.1.1.

4.4.3.2 Cultural Resources

The Proposed Actions have been designed to avoid identified cultural resources in Dixie Valley. Increased traffic and activity in the lease area, when combined with traffic from other current and potential future activities, could cause an incremental additional risk of unintentional disturbance of cultural resource areas. BMPs would be used to prevent or minimize unauthorized or unintentional disturbance of cultural resource areas.

4.4.3.3 Native American Concerns

Much of the state of Nevada is part of the traditional Paiute and Western Shoshone lands occupied for centuries before Europeans arrived, and the land maintains cultural significance for the Native American community. Over the last couple of decades more activities have begun encroaching on what has been a largely unpopulated and pristine environment. Increases in livestock grazing, oil and gas exploration, geothermal exploration and development, mining, and recreational activities such as OHV, hunting and fishing, hiking, and mountain biking have become more common in the vicinity. These multiple uses, and the increased frequency of them, contribute to the overall decline in cultural resource sites and traditional cultural properties significant to the spiritual or cultural identities of the Native American Tribes.

In order to minimize the potential cumulative contribution of the Proposed Actions to impacts such as these, BLM Stillwater Field Office and the affected Tribal organizations need to maintain an open and honest dialog in managing public lands. All interested parties need to remain flexible in their approach to making decisions on how to administer the multiple activities taking place on public lands. Through productive communications and understanding the needs of the other parties, the decisions made on how to manage the land can reduce or eliminate impacts to any party's interests on public lands.

4.4.3.4 Paleontological Resources

Paleontological resources would be disturbed through implementation of the Proposed Actions, as described in Section 4.1.4. Such disturbances, when combined with disturbances from other current and future activities that disturb the surface and subsurface of the land, would have a cumulative impact on paleontological resources. However, implementation of BMPs to prevent unauthorized or uncontrolled disturbance of the land would limit the impacts.

4.4.3.5 Biological Resources

The Proposed Actions would have impacts to biological resources. Vegetation and habitat would be disturbed and removed, and invasive, non-native plant species may spread as a result of the Proposed Actions. Other development such as described in Section 4.2.1 in the area may also remove vegetation and increase growth of invasive species. However mitigation measures including reseeding of disturbed areas and monitoring of invasive species would reduce potential impacts. Wildlife habitat, including habitat for migratory birds and BLM sensitive species, could be disturbed or removed due to other development in the area. Human activity and noise could displace wildlife to surrounding areas. However, similar abundant habitat is found in the area and region, and reseeding of disturbed areas could re-establish wildlife habitat. Overall, the Proposed Action would have a negligible contribution to cumulative effects on biological resources within the analysis area.

4.4.3.6 Livestock Grazing

Because the Proposed Actions would result in a reduction of AUMs of less than 1 percent, no reduction in authorized grazing capacity would occur. No other forage-disturbing activities are known to be planned in the area

4.4.3.7 Wastes, Hazardous or Solid

Solid waste and hazardous materials would be transported, stored, and used as part of the Proposed Actions. When combined with other area activities, the increase in the total volume of wastes handled would result in an increased risk of spill or other release of waste materials to the environment. Implementation of the BMPs described in Section 4.1.7 would minimize the potential for wastes and hazardous materials to be released to the environment.

4.4.3.8 Water Quality and Water Quantity

When combined with other current and potential future area activities, such as other geothermal development, there would be an increased potential for impacts to surface water and groundwater quality. Potential impacts to groundwater quality would be minimized through the use of BMPs for well construction. Percolation of geothermal fluids from well testing could have a temporary local impact on groundwater quality and water levels. Potential impacts to surface water would be temporary and local, and also would be minimized through the use of BMPs.

4.4.3.9 Geology and Minerals

Because there are mining claims within the lease area, it is possible that the Proposed Actions could occur simultaneously with use of the area by mineral claimants. There are currently no mining Plans of Development identified within the project area. Therefore, the Proposed Actions are not expected to negatively impact mining claims in the lease area.

4.4.3.10 Soils

Soil erosion could be caused by the combination of the Proposed Actions along with other current and potential future area activities. The contribution of the Proposed Actions to soil erosion would be minimized through the use of the BMPs described in Section 4.1.10.1.

4.4.3.11 Visual Resources

Visual impacts from the Proposed Actions would be limited and would occur primarily during the construction process. If other geothermal exploration activities associated with the existing geothermal leases were to take place at the same time, the Proposed Actions could contribute to a temporary cumulative impact on visual resources. This contribution would be largely limited to the duration of construction when drill rigs are present onsite because any remaining structures would be low-level and not visible from a distance.

4.4.3.12 Lands and Realty

The Proposed Actions are consistent with BLM land use planning for the area and would not interfere with other ongoing or reasonably foreseeable future activities, and therefore would not contribute to cumulative impacts on land use.

SECTION 5

Consultation and Coordination

5.1 Agencies, Groups, and Individuals Contacted

Name	Agency	Project Expertise
Jeryl Gardner	Bureau of Water Pollution Control, NDEP	Water Resources
Kristine Hansen	USACE, Reno District Office	Wetlands and Waters of the U.S.
Karen Clementsen	USACE, Reno District Office	Wetlands and Waters of the U.S.
Tom McKay	Natural Resource Conservation Service	Soils
Melissa Marr	Nevada Division of Water Resources (DWR)	Water Resources
Ken Haffey	Nevada Division of Water Resources (DWR)	Water Resources
Alvin Moyle	Chairman Fallon Paiute Shoshone Tribe	Native American Consultation
Rochanne Downs	Vice Chairperson Fallon Paiute Shoshone Tribe	Native American Consultation
Richard Black	Fallon Paiute Shoshone Tribe	Native American Consultation

5.2 List of Preparers

Name	Title	Project Expertise
BLM Stillwater Field Office		
Desna Young		NEPA PM, Noise
Jim deLaureal		Air Quality, Floodplains, Noxious Species, Wetlands, Soil, Farmlands
Chuck Kihm		Visual Resources and Lands
Linda Appel		Vegetation, Livestock Grazing, Wetlands,
John Wilson		Migratory Birds, Wetlands, Wildlife, Special Status Species
Carla James		Geology/Minerals
Susan McCabe		Cultural Resources
Rita Suminski		Wildlife Biology
Gabriel Venegas		Water Quality (Surface/Ground)
CH2M HILL		
Linnea Eng, P.E.	Task Manager	Project Description; Cumulative Impacts

		Analysis
W. Geoffrey Spaulding, Ph.D.	Paleontologist	Paleontological Resources
Amy Hammontree	Biologist/Environmental Scientist	Recreation; Range Resources; Lands and Realty; Economic Values
Katy Oakes	Biologist	Biological Resources
Aaron Fergusson	Cultural Resources Specialist	Cultural Resources
Cindy Newman	Ecologist/Environmental Scientist	Soils; Water Resources; Biological Resource
Kenneth Shump, P.G.	Senior Hydrogeologist	Geology; Water Resources
Jennifer Claghorn, P.E.	Environmental Engineer	Air Quality
Staci Hill, P.E.	Environmental Engineer	Visual Resources; Wastes
Mark Greenig	Environmental Planner	Visual Resources
Christine Roberts	Senior Environmental Planner	NEPA Specialist; senior review
Amy Lahav	EA preparation manager	Permitting Specialist
Jerry Salamy	Senior Project Manager	Permitting specialist
Intertech Services Corporation		
Mike Baughman, Ph.D.	Consultant	NEPA compliance, senior review

5.3 List of Agencies, Tribes, Organizations Contacted

Rochanne Downs	Cultural Resources Director	Fallon-Paiute Shoshone Tribe
Ray Stands	Cultural Resource Coordinator	Fallon-Paiute Shoshone Tribe
Richard Black	Environmental Director	Fallon-Paiute Shoshone Tribe
Nevada State Clearinghouse		
Commanding Officer	NAS Fallon	
Kenny Pirkle	Nevada Division of Wildlife	
Paul Pluoviez	Dixie Valley Ranch	
Friends of Nevada Wilderness		
Brad T. Goetsch	Churchill County Manager	

SECTION 6

References

Bettinger, R.L. and M.A. Baumhoff. 1982. "The Numic Spread: Great Basin Cultures in Competition." *American Antiquity* 47: 485-503.

Blackwell, D.D., Smith, R.P., and M.C. Richards. 2007. Exploration and development at Dixie Valley, Nevada: Summary of DOE studies. In *Proceedings, Thirty-second Workshop on Geothermal Reservoir Engineering*, Stanford University, Stanford, CA. SGP-TR-183.

Bruton, C.J., D. Counce, D. Bergfeld, F. Goff, S.D. Johnson, J.N. Moore, and G. Nimz. 1997. *Preliminary Investigation of Scale Formation and Fluid Chemistry at the Dixie Valley Geothermal Field, Nevada.* Lawrence Livermore National Laboratory. Preprint UCRL-JC-127850. Available at http://www.osti.gov/energycitations/purl.cover.jsp?purl=/632507-smYPDM/webviewable/

CH2M HILL, 2009a. *Initial Paleontological Resources Assessment TGP Dixie Development Company's Northern Nevada Geothermal Project, Coyote Canyon and Dixie Meadow Areas.* Prepared for the U.S. Bureau of Land Management, Carson City Field Office, NV.

CH2M HILL. 2009b. *Biological Survey Report, Coyote Canyon and Dixie Meadows Geothermal Facilities.* August.

Churchill County Planning Department. 2005. Churchill County Master Plan (2005 Update).

Cronquist, A., A. Holmgren, N. Holmgren, and J. Reveal. 1972. *Intermountain Flora: Vascular Plants of the Intermountain West, U.S.A., Volume 1.* Hafner Publishing Company, Inc, NY.

Elston, R.G. 1986. "Prehistory of the Western Area." *Handbook of North American Indians,* Volume 11: Great Basin. Warren L. D'Azevedo, editor. Smithsonian Institution, Washington DC.

Federal Emergency Management Agency (FEMA). 2008a. Flood Insurance Rate Map (FIRM) Churchill County, Nevada and Incorporated Areas. Panel 475 of 2800. Map Number 32001C0475F. Effective Date September 26. Flood Map Viewer. Internet Web Site: https://hazards.fema.gov/wps/portal/mapviewer. Accessed in June 2009.

Federal Emergency Management Agency (FEMA). 2008b. Flood Insurance Rate Map (FIRM) Churchill County, Nevada and Incorporated Areas. Panel 825 of 2800. Map Number 32001C0825F. Effective Date September 26. Flood Map Viewer. Internet Web Site: https://hazards.fema.gov/wps/portal/mapviewer. Accessed in June 2009.

Freeman, Dan. 1986. *Screening Analysis for H_2S Emissions from Proposed Dixie Valley Geothermal Facility.* Desert Research Institute, Reno, NV

Karst, Gary B. 1987. *Analysis of the Northern Dixie Valley Groundwater Flow System Using a Discrete-State Compartment Model.* A University of Nevada M.S. Thesis. September.

McGuire, Kelly. 1993. *A Cultural Resources Inventory of a 1200 Acre Geothermal Development Area in Dixie Valley, Churchill County, Nevada.* BLM Report No. 1570-P. Far Western Anthropological Research Group, Inc., Virginia City, NV.

National Park Service. 1998. Director's Order 28: Cultural Resource Management Guideline. NPS Office of Policy, NPS-28.

Nevada Department of Agriculture. 2008. Noxious Weed List. http://agri.nv.gov/nwac/PLANT_NoxWeedList.htm. Accessed: August 14, 2009.

Nevada Department of Conservation and Natural Resources, Division of Water Resources (NDCNR-DWR), Office of the State Engineer. 2005. Designated Groundwater Basins of Nevada. September.

Nevada Department of Conservation and Natural Resources, Division of Water Resources (NDCNR-DWR). 2009. Internet Web Site: http://water.nv.gov. Accessed in August 2009.

Ryall, A.S. and U.R. Vetter. 1982. Seismicity Related to Geothermal Development in Dixie Valley, Nevada. Seismological Laboratory, University of Nevada, Reno, NV. DOE/NV/10054-3(DE82018081). July 8, 1982.

Smith, R.P., K.W. Wisian, and D.D Blackwell. 2001. "Geologic and Geophysical Evidence for Intra-Basin and Footwall Faulting at Dixie Valley, Nevada." *Geothermal Resources Council Transactions.* Vol. 25. August 26-29.

TGP. 2009. Personal communication between TGP staff and Amy Lahav/CH2M HILL.

U.S. Bureau of Land Management (BLM). 1984. *Bureau of Land Management Grazing Management Handbook* (BLM Handbook H-4120-1). 1984.

BLM. 1986. Manual H-8410-1 - Visual Resource Inventory.

BLM. 2001. *Consolidated Resource Management Plan.* Carson City Field Office, Carson City, NV. May.

BLM. 2003. Nevada BLM sensitive species on the Carson City District taken from http://www.nv.blm.gov/wildlife/documents/sensitivespecies.pdf. Unpub. Doc. CCDO files.

BLM. 2007a. *Surface Operating Standards and Guidelines for Oil and Gas Exploration and Development, Fourth Edition* (Gold Book).

BLM. 2007b. IM-2008-050 Migratory Bird Treaty Act – Interim Guidance. Dated December 18. Unpub. Doc. CCFO files.

BLM. 2007c. *Instructional Memorandum 2008-009 Potential Fossil Yield Classification (PFYC) System for Paleontological Resources on Public Lands.* October 15, 2007.

BLM. 2008a. *Final Programmatic Environmental Impact Statement for Geothermal Leasing in the Western United States.* FES 08-44. October 2008. Available online at: http://www.blm.gov/wo/st/en/prog/energy/geothermal/geothermal_nationwide/Documents/Final_PEIS.html.

BLM. 2008b. National Environmental Policy Act Handbook H-1790-1. January.

BLM. 2008c. BLM Manual 6840 - Special status species management. Release Date 12/12/2008 under IM-2009-039. U.S. Dept. Int. - Bureau of Land Management, Washington, DC.

BLM. 2008d. Record of Decision and Resource Management Plan Amendments for Geothermal Leasing in the Western United States. BLM-WO-GI-09-003-1800, FES - 08-44. December 2008.

BLM. 2009a. North Stillwater Herd Management Area, Churchill and Pershing Counties, Nevada. http://www.nv.blm.gov/hma/winnemucca/n_stillwater.pdf. Accessed: August 14, 2009.

BLM. 2009b. Rangeland Administration System. Rangeland Allotment Master. Available online at: http://www.blm.gov/ras/allotment.htm. Accessed August 13, 2009.

BLM. 2009c. National Integrated Land System GeoCommunicator. Available online at: http://www.geocommunicator.gov/GeoComm/index.shtm. Accessed August 12, 2009.

U.S. Department of Agriculture (USDA) National Resource Conservation Service (NRCS). 2009. Internet Web Site: http://soildatamart.nrcs.usda.gov/Report.aspx?Survey=NV770& UseState=NV. Accessed in August 2009.

U.S. Department of Interior. 2008. Departmental Manual Part 516 (National Environmental Policy Act of 1969), Chapter 11, Managing the NEPA Process (516 DM 11). Bureau of Land Management. May 8. http://elips.doi.gov/app_dm/act_getfiles.cfm?relnum=3799

U.S. Fish and Wildlife Service (USFWS), Nevada Fish and Wildlife Office. 2009a. Species List for Coyote Canyon Geothermal Power Project, Churchill County, NV. File No. 2009-SL-0422. August, 26.

U.S. Fish and Wildlife Service (USFWS), Nevada Fish and Wildlife Office. 2009b. Species List for Dixie Meadows Geothermal Power Project, Churchill County, NV. File No. 2009-SL-0423. August 26.

U. S. Fish and Wildlife Service (USFWS). 2008. National Wetlands Inventory website. U.S. Department of the Interior, Washington, DC. http://www.fws.gov/wetlands/. Accessed in June 2009.

Southwestern United States. Version 1.0. RS/GIS Laboratory, College of Natural Resources, Utah State University. National Gap Analysis Program. http://earth.gis.usu.edu/swgap/ landcover.html. Accessed June-September 2009.

U.S. Geological Survey (USGS). 2008. SAGEMAP. http://sagemap.wr.usgs.gov/ListData.aspx

USGS National Gap Analysis Program. 2004. Provisional Digital Land Cover Map for the Southwestern United States. Version 1.0. RS/GIS Laboratory, College of Natural Resources, Utah State University. Accessed: August 14, 2009

Wilson, John. 2009. Email response from John Wilson, BLM Wildlife Biologist, to Katy Oakes of CH2M HILL on November 12.

Young, D.C. and A.R. Garner. 2009. *Class III Cultural Resources Inventory of Coyote Canyon and Dixie Meadows Geothermal Leases in Dixie Valley, Churchill County, Nevada*. BLM Report No. CRR3-2495. Far Western Anthropological Research Group, Inc., Virginia City, NV.